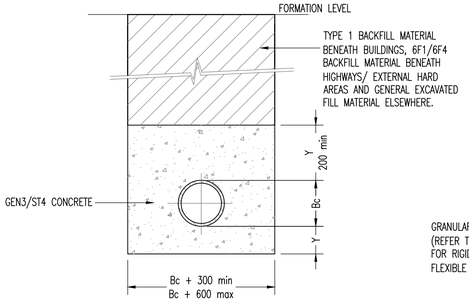

TO BE USED WHERE COVER TO PIPE IS:
1. LESS THAN 1.2m IN TRAFFICKED AREAS
2. LESS THAN 0.90m IN FIELDS
3. LESS THAN 0.6m IN LANDSCAPED AREAS
4. LESS THAN 0.3m BENEATH BUILDING SLABS

CLASS Z BEDDING DETAIL

Y VALUE:
HARD SPOTS/IRREGULAR TRENCH BOTTOM BC/4 (200mm MIN)
EVEN TRENCH BOTTOM BC/6 (100mm MIN)
BC = OUTSIDE PIPE DIAMETER

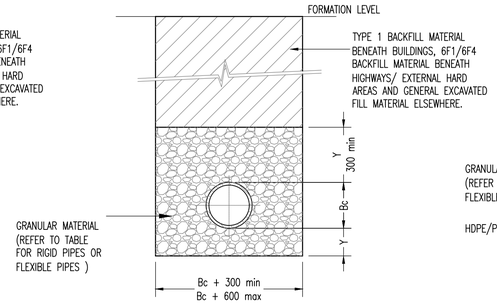

CLASS S BEDDING DETAIL

Y VALUE:
HARD SPOTS/IRREGULAR TRENCH BOTTOM BC/4 (200mm MIN)
EVEN TRENCH BOTTOM BC/6 (100mm MIN)
BC = OUTSIDE PIPE DIAMETER

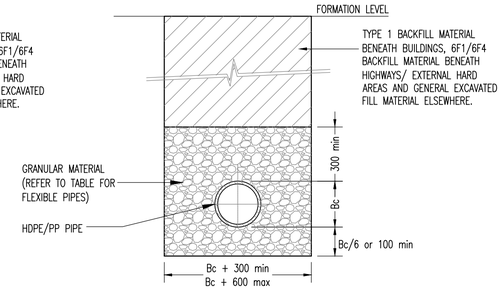

CLASS P/T/W BEDDING DETAIL

CLASS P 0.6m – 2.0m
CLASS T >2.0m
CLASS W BENEATH BUILDINGS
(FLEXIBLE PIPE CONSTRUCTION)

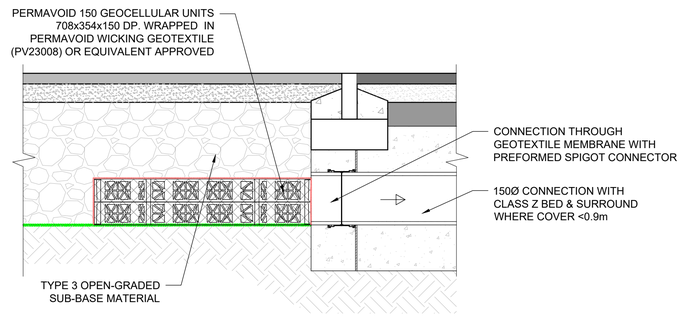

TYPICAL PERMAVOID OUTLET DETAIL

SCALE - 1:10

BS EN 1610:1998 ANNEX B TABLE B.15 COARSE AGGREGATE – PIPE BEDDING							
SIEVE SIZE (mm)	PERCENTAGE BY MASS PASSING BS SIEVES FOR NOMINAL SIZES						
	GRADED AGGREGATE (mm)			SINGLE–SIZED AGGREGATE (mm)			
	40 to 5	20 to 5	14 to 5	40	20	14	10
50.0	100	-----	-----	100	-----	-----	-----
37.5	90 – 100	100	-----	85 – 100	100	-----	-----
20.0	35 – 70	90 – 100	100	0 – 25	85 – 100	100	-----
14.0	-----	-----	90 – 100	-----	-----	85 – 100	100
10.0	10 – 40	30 – 60	50 – 85	0 – 5	0 – 25	0 – 50	85 – 100
5.0	0 – 5	0 – 10	0 – 10	-----	0 – 5	0 – 10	0 – 25
2.36	-----	-----	-----	-----	-----	-----	0 – 5

RIGID PIPES BEDDING GRADING

FOR RIGID PIPES THE BEDDING SHOULD BE SINGLE SIZE MATERIAL OR GRADED MATERIAL FROM 5mm UP TO A MAX SIZE OF 10mm FOR 100mm PIPES; 14mm FOR 150mm PIPES; 20mm FOR 225mm TO 600mm PIPES; 40mm FOR OVER 600mm PIPES

TRENCH WIDTHS

PIPE I.D	OVERALL TRENCH WIDTH
100	550
150	600
225	700
300	850
375	1050
450	1150
525	1200
600	1350
675	1450
750	1500
825	1600
900	1900
1050	2100
1200	2300
1350	2500
1500	2700
1800	3100

PIPE ø	JOINT THICKNESS
< 450	18mm
450 – 1200	36mm
>1200	54mm

COMPRESSIBLE FILLER TABLE

(BITUMEN IMPREGNATED INSULATING BOARD TO BS EN 622–1 AND BS EN 622–4)

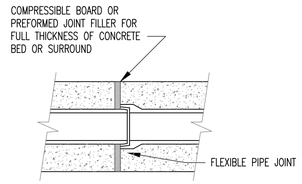

JOINTS FOR CONCRETE SURROUND TO PIPES

(AT EACH PIPE JOINT)

BS EN 13242, COARSE AGGREGATE (CLAUSE 4.3.2)		
CATEGORY FOR GENERAL GRADING REQUIREMENTS	Gc80–20	
CATEGORY FOR TOLERANCES AT MID–SIZE SIEVES	GTnr (NO REQUIREMENTS)	
CATEGORY PF MAXIMUM VALUES OF FINES CONTENTS	GRAVEL – F1.5 CRUSHED ROCK, RECYCLED AGGREGATE – F4	
NOMINAL PIPE DIAMETER, mm	AGGREGATE SIZE, mm	
	GRADED	SINGLE SIZED
NOT EXCEEDING 140	–	4/10
EXCEEDING 140 BUT NOT EXCEEDING 400	2/14 or 4/20	4/10, 6/14 or 10/20
EXCEEDING 400	2/14, 4/20 or 4/40	4/10, 6/14, 10/20 or 20/40

FLEXIBLE PIPE BEDDING, HAUNCHING AND SURROUND MATERIAL

NOMINAL DIA. (mm)	EFFECTIVE LENGTH (m)
150 to 600	0.6
675 to 750	1.0
825 & over	1.25

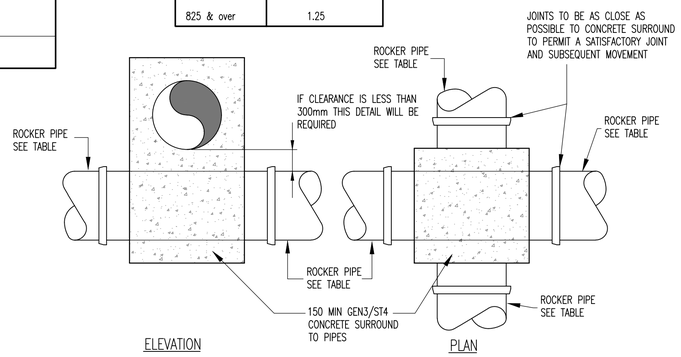

SPECIAL PIPE CROSSOVER DETAIL

REQUIRED IF CLEARANCE BETWEEN PIPES CROSSING EACH OTHER IS LESS THAN 300mm

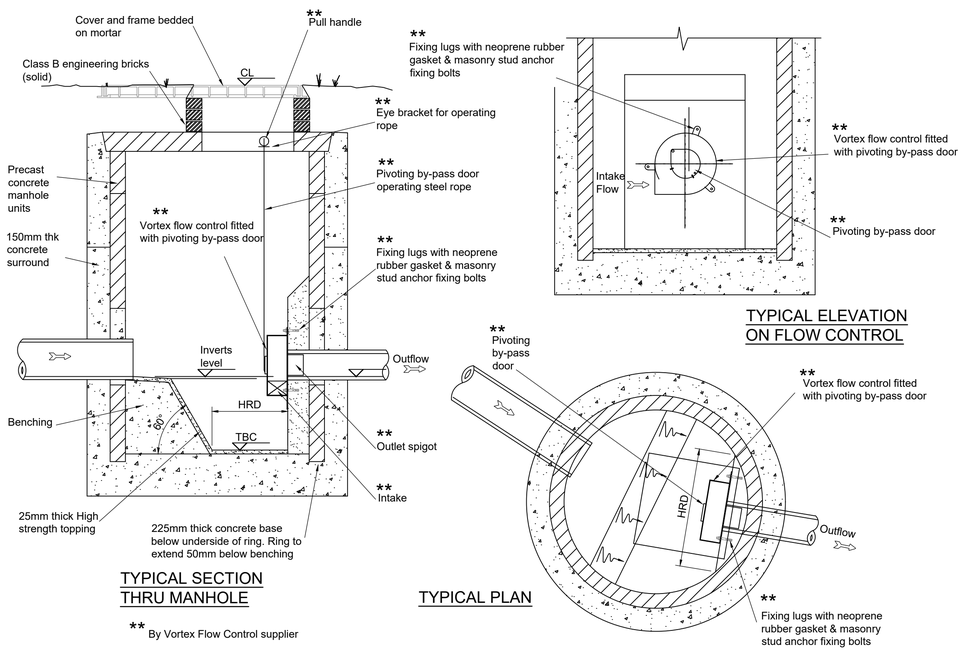

TYPICAL SECTION THRU MANHOLE

TYPICAL ELEVATION ON FLOW CONTROL

TYPICAL PLAN

TYPICAL VORTEX FLOW CONTROL MANHOLE

NOT TO SCALE

THIS DRAWING IS THE PROPERTY OF RoCp. COPYRIGHT IS RESERVED BY THEM AND THE DRAWING IS ISSUED ON THE CONDITION THAT IT IS NOT COPIED, REPRODUCED, RETAINED OR DISCLOSED TO ANY UNAUTHORISED PERSON EITHER WHOLLY OR IN PART WITHOUT THE WRITTEN CONSENT OF RoCp

NOTES

FOR SURFACE WATER DRAINAGE LAYOUT PLAN REFER TO DRAWING DR–C–DGA01

FOR DRAINAGE NOTES REFER TO DRAWING DR–C–DN01

REV.	DATE	DETAILS	DRN.	CHK.
P1	24.09.21	CONDITION DISCHARGE	ARJ	JAS

DRAWING STATUS
INFORMATION

RIBA STAGE
STAGE 4

RoC CONSULTING
Commercial Wharf
6 Commercial Street
Manchester M15 4PZ
T 0161 214 5390
W rocconsulting.com

DRAWN	DATE	SCALES
ARJ	SEP 21	AS SHOWN
CHECKED PAW	DATE SEP 21	THE ABOVE SCALES APPLY WHEN PLOTTED AT A1 SIZE –DO NOT SCALE–
APPRVD. JAS	DATE SEP 21	EMAIL FOR DRAWINGS info@rocconsulting.com

CLIENT
FAR EAST CONSORTIUM LTD

PROJECT TITLE
VICTORIA RIVERSIDE

DRAWING TITLE
TYPICAL DRAINAGE DETAILS SHEET 2

DRAWING No.	REV.
VRS-ROC-ZZ-XX-DR-C-DCD02	P1

4212

© RoCp Ltd.