CM Oxendale Ltd Alan Ramsbottom Way, Heys Lane Industrial Estate, Great Harwood, Blackburn, BB6 7UR

Technical Submittal

External Louvres – Technical Submittal

Project:	**Blackley Cemetery and Crematorium**
Project No:	**9220**
TSM No:	**TSM 001**
Revision:	**A1**
Date:	**23.08.2021**

Building Servcies
Mechanical & Plumbing Servcies
www.cmoxendale.co.uk
email: info@cmoxendale.co.uk

All work undertaken would be subject to the B&ES Code of Fair Trading & subsequent Guarantee of all works carried out . CM Oxendale Ltd Terms & Conditions Apply
Vat No. 498020043
Director's: Paul Towler, Amy Towler, Registered In England No: 3769918

Plantroom Equipment - Technical Submittal

Project: **Blackley Cemetery and Crematorium – External Louvres**
Project No: **8627**
TSM No: **TSM 001**
Revision: **A1**
Date: **19.01.2021**

Room	Quantity	Item	Description	Product Code	Comment
Incinerator Room	2	Louvre	2000 x 500 External Weather Louvre, 50% FA c/w bird mesh located internally to louvre	GRAI	RAL color is to match the existing brickwork
Incinerator Room	2	Louvre	Split External Static Louvre mounted in 2No window frames replacing glazing's	GRAI	Size to be confirmed. RAL 7016 ANTHRACITE
Control Room	2	Louvre	2No 200x200 External Weather Louvre, 50% FA c/w bird mesh located internally to louvre	GRAI	RAL 7016 ANTHRACITE

Plantroom Equipment - Technical Submittal

External Images of Weathered Louvres – Louvre in Brickwork



Plantroom Equipment - Technical Submittal

External Images of Weathered Louvres – Louvre in Glazed Panels



COMPLETE AIR
SUPPLIES LTD.

GRAI

Louvre Grilles



GRAI

Film



Characteristics:
Louvre grilles with fixed and 45° inclined bars 60 mm pitch.

Construction:
Anodized aluminium.

Utilization:
For wall installation and for external air intake or exhaust air flow.

Fixing:
Fixing by clips or frontal screws on request.

Accessories:
- *Calibration damper made of galvanized steel and fins with opposite movement.*
- *Mounting counterframes made of galvanized steel sheet.*
- *Bird screen.*
- *Overpressure damper.*

	GRAI	GRAI-R	GRAI-R-Z	GRAI-R-SS	SC	CTP
BxH mm						
400x400						
500x400						
600x400						
800x400						
1000x400						
• 1200x400						
• 1400x400						
• 1600x400						
• 1800x400						
• 2000x400						
400x500						
500x500						
600x500						
800x500						
1000x500						
• 1200x500						
• 1400x500						
• 1600x500						
• 1800x500						
• 2000x500						
400x600						
600x600						
800x600						
1000x600						
• 1200x600						
• 1400x600						
• 1600x600						
• 1800x600						
• 2000x600						
400x800						
600x800						
800x800						
1000x800						
• 1200x800						
• 1400x800						
• 1600x800						
• 1800x800						
• 2000x800						
400x1000						
600x1000						
800x1000						
1000x1000						
• 1200x1000						
• 1400x1000						
• 1600x1000						

• *Intermediate reinforcing*

	GRAI	GRAI-R	GRAI-R-Z	GRAI-R-SS	SC	CTP
BxH mm						
1800x1000						
2000x1000						
400x1200						
600x1200						
800x1200						
1000x1200						
1200x1200						
1400x1200						
1600x1200						
1800x1200						
2000x1200						
400x1500						
600x1500						
800x1500						
1000x1500						
1200x1500						
1400x1500						
1600x1500						
1800x1500						
2000x1500						
2000x1600						
2000x1800						
2000x2000						

- Intermediate reinforcing

PAINTING:
Color RAL 9010 - 9016 - 7035: + 15%
Different colors: prices on request

DESCRIPTIONS:

GRAI: Aluminium louvre grille 60 mm between bars (standard). 75 or 100mm on request.

GRAI-R: Aluminium louvre grille 60 mm between bar with bird mesh

GRAI-R-Z: Aluminium louvre grille 60 mm between bors with insect screen

GRAI-R-SS: Aluminium louvre grille 60 mm between bars with bird mesh and overpressure damper

AVAILABLE ON REQUEST:
- grille with rain-proof panel
+TEG +5% INCREASE

ACCESSORIES:
SC: Opposed blade damper
CTP: Counterframe in galvanised steel sheet profile section
PBZ: Connecting plenum

Note: 60 mm between bars (standard)
75 or 100 mm on request

DRAWINGS

GRAI

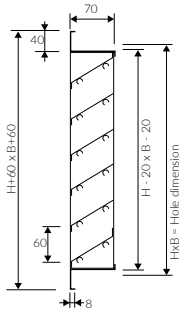

GRAI+SC

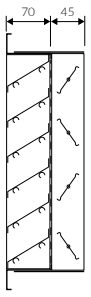

GRAI-R

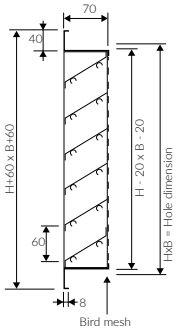

GRAI-R-Z

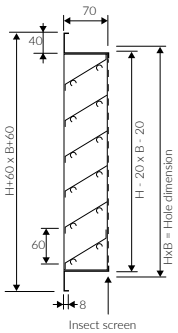

GRAI-R-SS-A

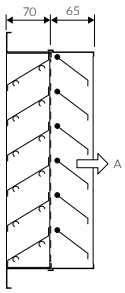

GRAI-R-SS-E

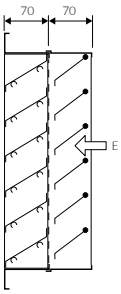

GRAI + TEG

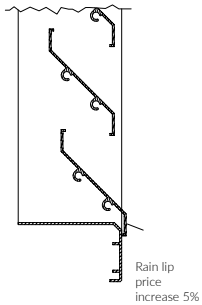

CTP-GRAI

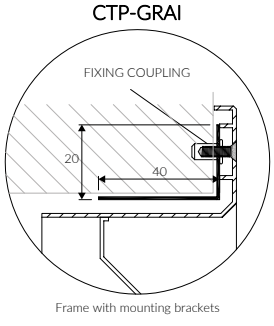

TYPE OF FIXING

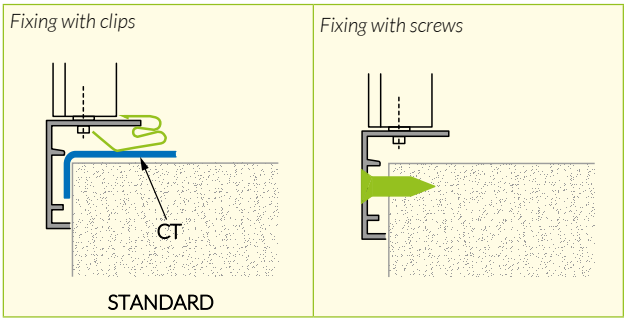

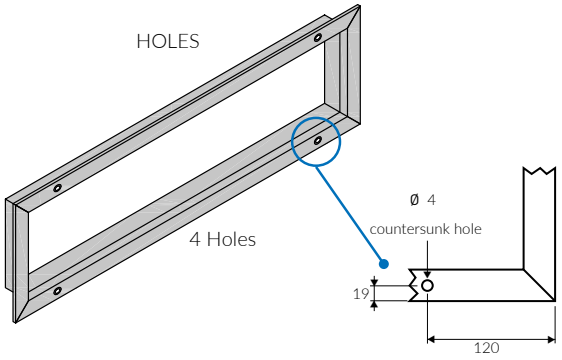

QUICK SELECTION DIAGRAM

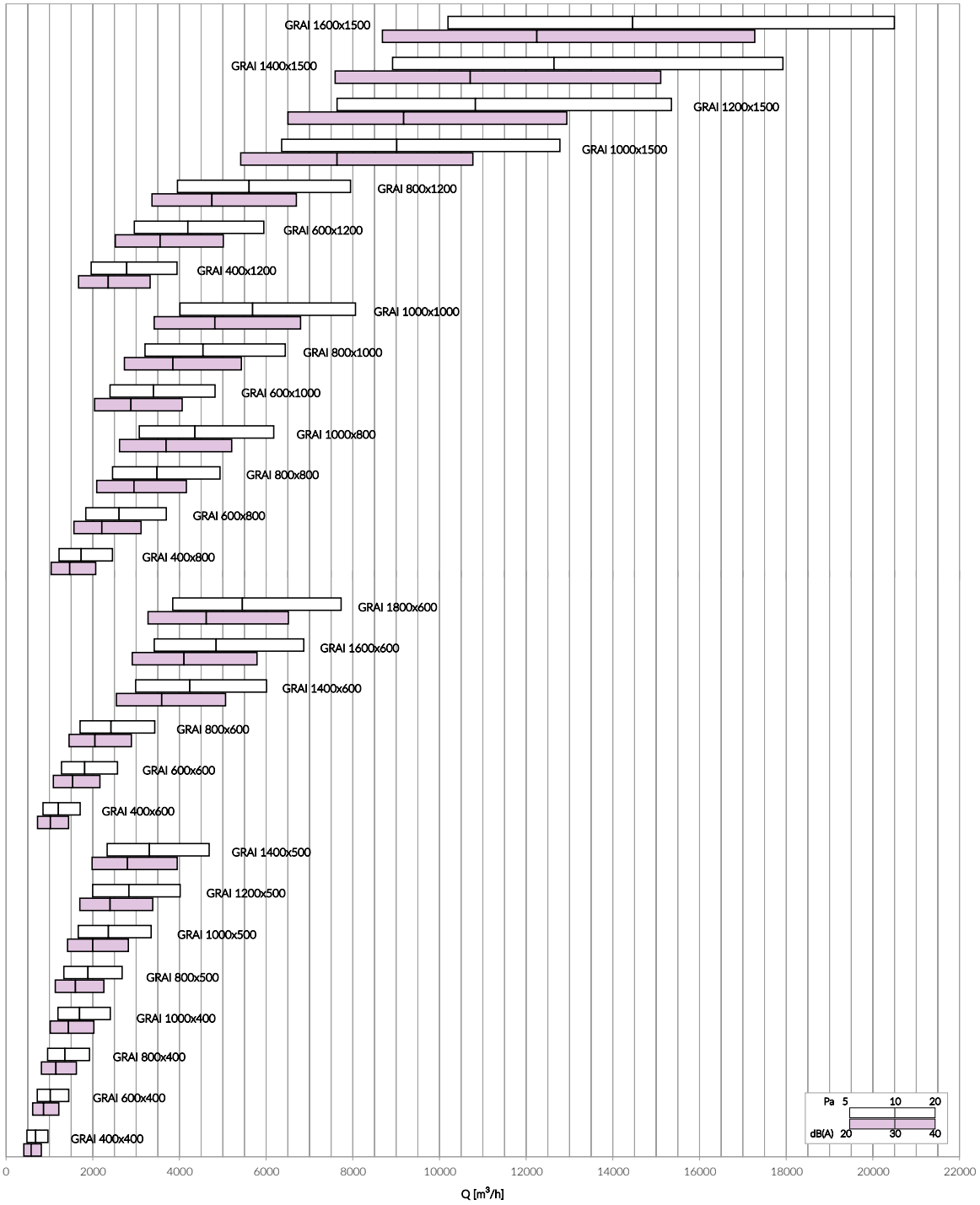

SELECTION TABLE

Modello Model	A_k [m²]	Q [m³/h]		L_{WA} [dB(A)]		Dp_t [Pa]	
		min	max	min	max	min	max
GRAI 400x400	0,0771	480	970	25	45	5	20
GRAI 600x400	0,1153	720	1450	25	45	5	20
GRAI 800x400	0,1535	960	1930	25	45	5	20
GRAI 1000x400	0,1917	1200	2410	25	45	5	20
GRAI 1200x400	0,2299	1440	2880	25	45	5	20
GRAI 1400x400	0,2681	1670	3360	25	45	5	20
GRAI 1600x400	0,3063	1910	3840	25	45	5	20
GRAI 1800x400	0,3445	2150	4320	25	45	5	20
GRAI 2000x400	0,3827	2390	4800	25	45	5	20
GRAI 400x500	0,1068	670	1340	25	45	5	20
GRAI 500x500	0,1335	830	1670	25	45	5	20
GRAI 600x500	0,1602	1000	2010	25	45	5	20
GRAI 800x500	0,2135	1330	2680	25	45	5	20
GRAI 1000x500	0,2669	1670	3350	25	45	5	20
GRAI 1200x500	0,3203	2000	4020	25	45	5	20
GRAI 1400x500	0,3736	2330	4690	25	45	5	20
GRAI 1600x500	0,4270	2670	5360	25	45	5	20
GRAI 1800x500	0,4804	3000	6030	25	45	5	20
GRAI 2000x500	0,5338	3330	6700	25	45	5	20
GRAI 400x600	0,1365	850	1710	25	45	5	20
GRAI 600x600	0,2050	1280	2570	25	45	5	20
GRAI 800x600	0,2735	1710	3430	25	45	5	20
GRAI 1000x600	0,3421	2140	4290	25	45	5	20
GRAI 1200x600	0,4106	2560	5150	25	45	5	20
GRAI 1400x600	0,4792	2990	6010	25	45	5	20
GRAI 1600x600	0,5477	3420	6870	25	45	5	20
GRAI 1800x600	0,6162	3850	7730	25	45	5	20
GRAI 2000x600	0,6848	4270	8590	25	45	5	20
GRAI 400x800	0,1958	1220	2460	25	45	5	20
GRAI 600x800	0,2947	1840	3700	25	45	5	20
GRAI 800x800	0,3936	2460	4940	25	45	5	20
GRAI 1000x800	0,4924	3070	6180	25	45	5	20
GRAI 1200x800	0,5913	3690	7420	25	45	5	20
GRAI 1400x800	0,6902	4310	8660	25	45	5	20
GRAI 1600x800	0,7890	4920	9900	25	45	5	20
GRAI 1800x800	0,8879	5540	11140	25	45	5	20
GRAI 2000x800	0,9868	6160	12380	25	45	5	20
GRAI 400x1000	0,2552	1590	3200	25	45	5	20
GRAI 600x1000	0,3844	2400	4820	25	45	5	20
GRAI 800x1000	0,5136	3210	6440	25	45	5	20
GRAI 1000x1000	0,6428	4010	8070	25	45	5	20
GRAI 1200x1000	0,7720	4820	9690	25	45	5	20
GRAI 1400x1000	0,9012	5620	11310	25	45	5	20
GRAI 1600x1000	1,0304	6430	12930	25	45	5	20
GRAI 1800x1000	1,1596	7240	14550	25	45	5	20
GRAI 2000x1000	1,2888	8040	16170	25	45	5	20
GRAI 400x1200	0,3146	1960	3950	25	45	5	20
GRAI 600x1200	0,4741	2960	5950	25	45	5	20
GRAI 800x1200	0,6336	3950	7950	25	45	5	20
GRAI 1000x1200	0,7932	4950	9950	25	45	5	20
GRAI 1200x1200	0,9527	5950	11950	25	45	5	20
GRAI 1400x1200	1,1122	6940	13950	25	45	5	20
GRAI 1600x1200	1,2718	7940	15960	25	45	5	20
GRAI 1800x1200	1,4313	8930	17960	25	45	5	20
GRAI 2000x1200	1,5908	9930	19960	25	45	5	20
GRAI 400x1500	0,4036	2520	5060	25	45	5	20
GRAI 600x1500	0,6086	3800	7640	25	45	5	20
GRAI 800x1500	0,8137	5080	10210	25	45	5	20
GRAI 1000x1500	1,0187	6360	12780	25	45	5	20
GRAI 1200x1500	1,2237	7640	15350	25	45	5	20
GRAI 1400x1500	1,4288	8920	17930	25	45	5	20
GRAI 1600x1500	1,6338	10200	20500	25	45	5	20
GRAI 1800x1500	1,8388	11480	23070	25	45	5	20
GRAI 2000x1500	2,0439	12760	25640	25	45	5	20
GRAI 2000x1600	2,1949	13700	27540	25	45	5	20
GRAI 2000x2000	2,7989	17470	35120	25	45	5	20

COMPLETE AIR SUPPLIES LTD.

Complete Air Supplies Ltd

VAT No: 333 0179 33
Company Reg. No: 12179608

T: +44 (0) 8000 44 80 24
E: sales@completeairsupplies.co.uk
W: www.completeairsupplies.co.uk

All details within this brochure are correct at time of publication.
Complete Air Supplies Ltd reserve the right to alter any details published in this brochure without any prior notice.
All information is to be used for informative purposes only.
Complete Air Supplies Ltd will not be legally bound by anything contained within this publication, or any other information distributed.