FIREMASTER®

ACTIVE FIRE CURTAIN
BARRIER ASSEMBLIES

WWW.COOPERSFIRE.COM



coopers
EST. 1983

LEADING THE WAY IN FIRE PROTECTION

DESIGN SOLUTIONS THAT WORK FOR YOU

Active Fire Curtain Barrier Assemblies comprise technologically advanced fire-resistant fabric barriers encased in a compact steel housing. Barriers remain invisibly retracted until activated by an alarm or detector signal, at which time they descend safely to their fire operational position.

To be compliant, Fire Barriers must be protected from a short circuit and or total power failure, this is achieved with our patented Total Gravity Fail-Safe (TGFS) system.



Fire barriers will stop and control the spread of fire in a building. If means of escape protection is required use FireMaster® Plus². With the use of smoke seals in the side guides, smoke control can also be offered with the FireMaster and FireMaster Plus² fire curtain.









SHOP FRONTS
- No need for expensive and noticeable fire-rated glass

ATRIA
- Curtains allow multi-floor concourse openings for large atria

ESCALATORS & STAIRWELLS
- No need for fire-rated walls

COMPARTMENTATION
- Virtual Fire Walls with unlimited width for maximum visibility to create open space

BOUNDARY PROTECTION
- Eliminate vertical and horizontal fire spread to other buildings

MEANS OF ESCAPE
- If means of escape are required use FireMaster® Plus²



Single Roller Assembly
(ResQ-Window™ optional)



Overlapping Roller Assembly

PRODUCT ADVANTAGES

- Fully compliant to BS 8524-1:2013 for Single and Overlapping fire curtains
- Safe rates of descent in accordance with BS 8524-1:2013 if there is a system corruption or wiring short or open circuit
- Total Gravity Fail-Safe (TGFS) operation ensures safe rates of descent even following total power loss in accordance with BS 8524-1:2013
- Single roller assembly curtains for spans up to 5m as standard. Unlimited widths can be achieved using the Overlapping assembly
- FireMaster Side Guides can incorporate smoke seals to help control smoke in accordance with BS EN 1634-3:2004 (see side guides section for drawings)
- All barriers allow egress for occupants and access for emergency services
- The ResQ-Window™ vision panel can be installed into the FireMaster and allows first responders to assess areas prior to entry

CASE STUDY: FORTNUM & MASON

LONDON UK

As part of its tercentenary celebrations, Fortum & Mason undertook a £24 million refurbishment that involved the removal of inhibiting walls and doors to open up the stores retail space.

To remain compliant with fire regulations, it was necessary to ensure that the building could continue to contain a fire, but meeting fire regulations whilst realising the open plan design would call for non-evasive fire protection.

Coopers solution was to install 16 FireMaster® active fire curtain barriers at the entrance of each trading floor that would remain hidden within the ceiling until required.

On activation, all 16 fire curtains deploy to contain the spread of fire for up to 2 hours. By installing Coopers Fire curtains, Fortnum & Mason were able to safely remove the stores non-loadbearing walls and fire doors and ensure that the new, open plan atrium complied with fire regulations

BENEFITS

- 16 FireMaster® fire curtains installed to contain a fire for up to 2 hours.
- Patented SLAT™ ceiling system ensures a sympathetic alignment
- Ensured open plan atrium met fire regulations
- Improved customer migration
- Fire Curtains branded with corporate logos

STANDARD AND SMOKE SEAL (SS) HEADBOX SIZES

Model No.	Maximum Barrier Width up to	Maximum Barrier Drop up to	Dimensions	
Single Roller			**X**	**Y**
FM 15/20	5 metres	4 metres (3.5m with Smoke Seals)	150mm	200mm
FM 18/22	5 metres	6 metres (4.5m with Smoke Seals)	180mm	220mm
FM 18/26	5 metres	8 metres (6m with Smoke Seals)	180mm	260mm
Overlapping				
FM 18/34	Unlimited	4 metres (n/a with Smoke Seals)	180mm	340mm
FM 20/40	Unlimited	8 metres (n/a with Smoke Seals)	200mm	400mm
Side by Side				
FM 30/20	Unlimited	6 metres (n/a with Smoke Seals)	300mm	200mm

Coopers Fire has a design solution for any size requirement.
For technical drawings please visit www.coopersfire.com
The table above represents maximum possible working dimensions for each product model. For product certification dimensions please contact Coopers Fire.

HEADBOX ILLUSTRATIONS

Single Roller

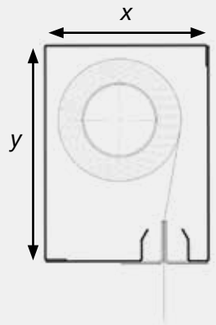

Single Roller with Smoke Seal

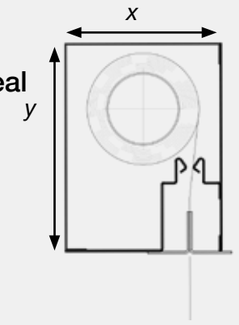

Side by Side

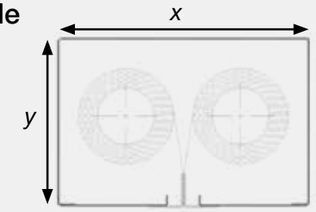

Overlapping

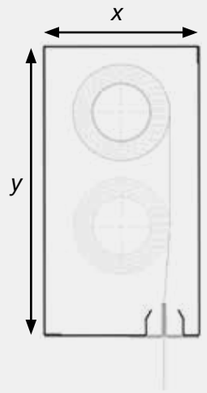

HOW THE HEADBOXES ARE INSTALLED



Unistrut and Drop Rods



I Beam



Face Fixed



Soffit Fixed

HOW ARE THE BARRIERS CONCEALED?

FireMaster® systems provide a range of ceiling interfaces and can even invisibly conceal the barriers in the ceiling whilst still allowing access for service and maintenance. All our systems remain totally concealed when non-operational.

For illustrative purposes only



T Bar
(BS 8524 Compliant)



Jumbo Bar Flush Fit
(BS 8524 Compliant)
(limited to 3m wide x 3m drop)



Jumbo Bar with Stall Plate
(BS EN 1634-1 Compliant
as part of an assessment)



Jumbo Bar with Ace Capping
(BS EN 1634-1 Compliant
as part of an assessment)

Side channels seal the curtain fabric and the building. Fire can cause extreme positive or negative pressures. Side guide channels are made from galvanised steel (available in standard RAL colours) that can be either surface mounted or recessed into the wall structure to give a flush finish. Coopers Fire unique fabric locking system has been developed and proven over many years. FireMaster Side Guides can incorporate smoke seals to help control smoke and is compliant with BS 8524-1:2013 and to the requirements of BS EN 1634-3:2004.

End Fixed



Face Fixed



Recessed Fixed
(Recommended 5mm gap between side guide and building material)



STANDARD SIDE GUIDE
Available with or without smoke seal for smoke control

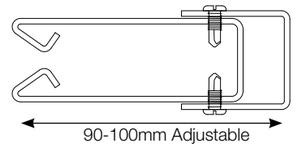

Other side guide sizes are available and drawings can be provided on request. For queries about special size requirements, please contact our technical department.

HOW IS THE BARRIER ACCESSED?

T Bar
(compliant with BS 8524)

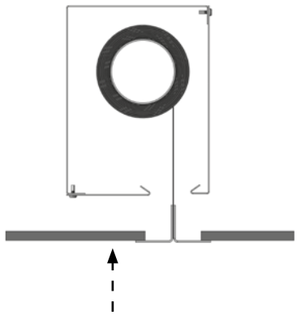

Removable ceiling interface for maintenance access

T Bar Flush Fit
(compliant with BS 8524)

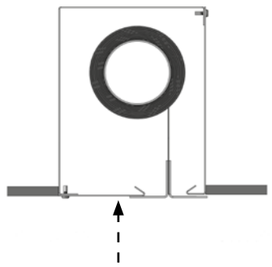

Removable section - access required

Jumbo Bar Flush fit
(compliant with BS 8524)

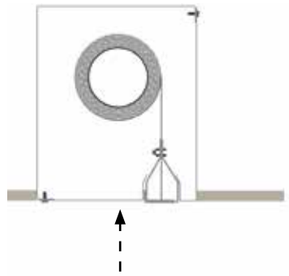

Removable section - access required

Jumbo Bar with Stall Plate
Only available under BS EN 1634-1

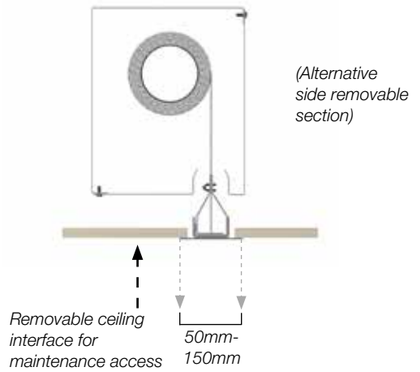

Jumbo Bar with Ace Capping (suspended ceiling)
for ease of maintenance through ceiling - no need for destructive access
Only available under BS EN 1634-1

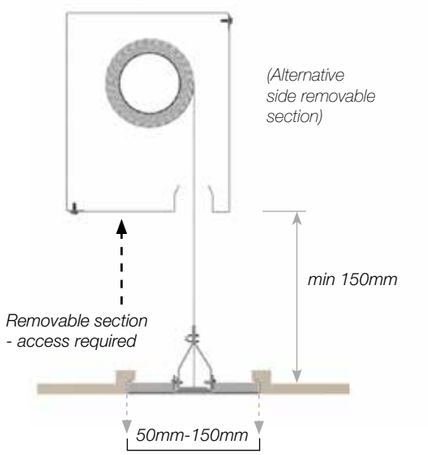

There are many fixing options to suit all types of ceiling configurations. Barriers can be integrated with both solid and suspended ceilings, enabling total project design flexibility.

The engineered design of the curved glazed facade required a bespoke fire barrier to provide boundary protection.

The FireMaster® fire curtains installed in this example illustrate how the headboxes and side channels are invisibly concealed and the entire system installed cannot be seen until deployed.





CONTROL OPTIONS

The Variospeed®6 BBU-CAM system is used for Smoke/Fire Curtain(s) fitted with 24Vdc permanent magnet electrical motors fitted with an internal 24Vdc electromagnetic brake, as standard. When the Smoke/Fire curtain(s) are fully retracted, the internal electromagnetic brake is powered, keeping the Smoke/Fire curtain(s) in their retracted position. Power to the motor is completely isolated, prolonging the life of the motor and maintaining manufacturers supply warranty.

The motors include built in short circuit and open circuit protection, meaning the curtains will deploy under total controlled gravity failsafe at a descent rate compliant with standards BS EN 12101 and BS 8524 even if the motor wires are severed, i.e. shorted together or disconnected from the Motor Control Card (MCC). In the event of an alarm activation the electromagnetic brake will de-energise and the Smoke / Fire curtain(s) will immediately deploy to their Fire Operational Position (FOP) under Gravity Failsafe.

Battery Back Up Controls at Motor (BBU Cam Option)

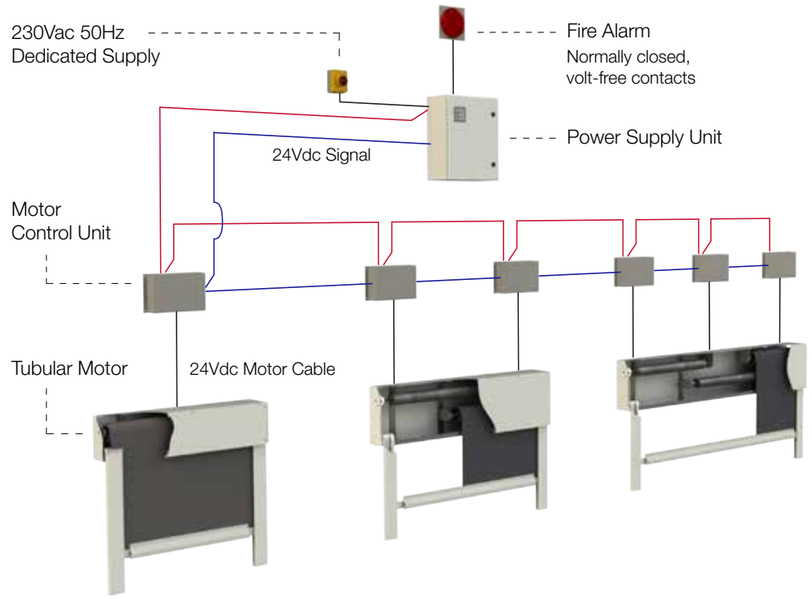

CONTROLS SPECIFICATION

POWER SUPPLY
230V AC 50Hz dedicated supply via all pole isolator

BATTERIES
2 x 12V 12A/h lead acid batteries

ALARM SIGNAL
Normally closed volt-free contacts. Open on activation

TEST FACILITY
Zone Control Panel (ZCP) located on front of Power Supply Unit (PSU)

DISPLAY
Power ON, Alarm ACTIVE and Alarm OFF status LED's on ZCP

Control Panels are EMC compliant.

PRODUCT SPECIFICATION

Under BS 8524-1:2013 the Single panel curtain achieves 180mins (3 hrs) and Overlapping panel achieves 120mins (2 hrs). FireMaster is classified as E180 EW30 for a Single panel curtain and E120 EW30 for an Overlapping panel curtain in accordance with BS EN 13501 2:2007+A1:2009.

The complete system is tested to BS EN 1634-1:2014 and is classified as E180 EW30 for a Single panel curtain and E120 EW30 for an Overlapping panel curtain in accordance with BS EN 13501 2:2007+A1:2009.

The fabrics are additionally tested for fire propagation to BS 476 6:1989+A1:2009 and surface spread of flame to BS 476-7:1997 to achieve National Class '0' in accordance with A13(b) of Approved Document B (Volumes 1 & 2) 2006 Edition 'Fire Safety' to England & Wales Building Regulations 2000.

Our fabrics are high performance fire barrier textiles, woven from a stainless steel wire plied continuous filament glass fibre thread, further protected by a metallic oxide enhanced flame retardant polymer coating. This provides a very high level of resistance to severe conditions, such as temperatures above 1000ºC and the related generation of immense heat energy and pressure associated with a fire scenario.

Materials used in the fire curtain assembly are non-hazardous and can be disposed of in household waste.

DON'T BE LIABLE

Fire Curtain Barriers MUST have a 'Total' Fail-Safe by Gravity in the event of total mains, wiring, short circuit and/or system corruption.

Coopers Fire, with their unique patented Total Gravity Fail-Safe (TGFS) system, are Independently Third Party Certified by a UKAS approved certification body to BS 8524-1:2013.

QUALITY ASSURANCE AND CERTIFICATION

MEMBERSHIP

CPD ACCREDITATIONS

For information, to get a quote
or to book a CPD workshop

Please call:
+44 (0)2392 454 405

or E-mail: info@coopersfire.com

WWW.COOPERSFIRE.COM

Coopers Fire Ltd
Ignis House, Houghton Avenue
Waterlooville, Hampshire
PO7 3DU. United Kingdom

Phone: +44 (0)2392 454 405
Email: info@coopersfire.com
Web: www.coopersfire.com

Coopers Fire Ltd has a policy of continuous product improvement.

As such we reserve the right to change design and specifications without prior notice.

Please check our website for the latest information.

© Coopers Fire Ltd. All content and products are copyright of Coopers Fire Ltd. Registered in England Number: 2010274. Multiple patents granted and pending.

Series 2 v14 Aug 2021



coopers
EST. 1983

LEADING THE WAY IN FIRE PROTECTION