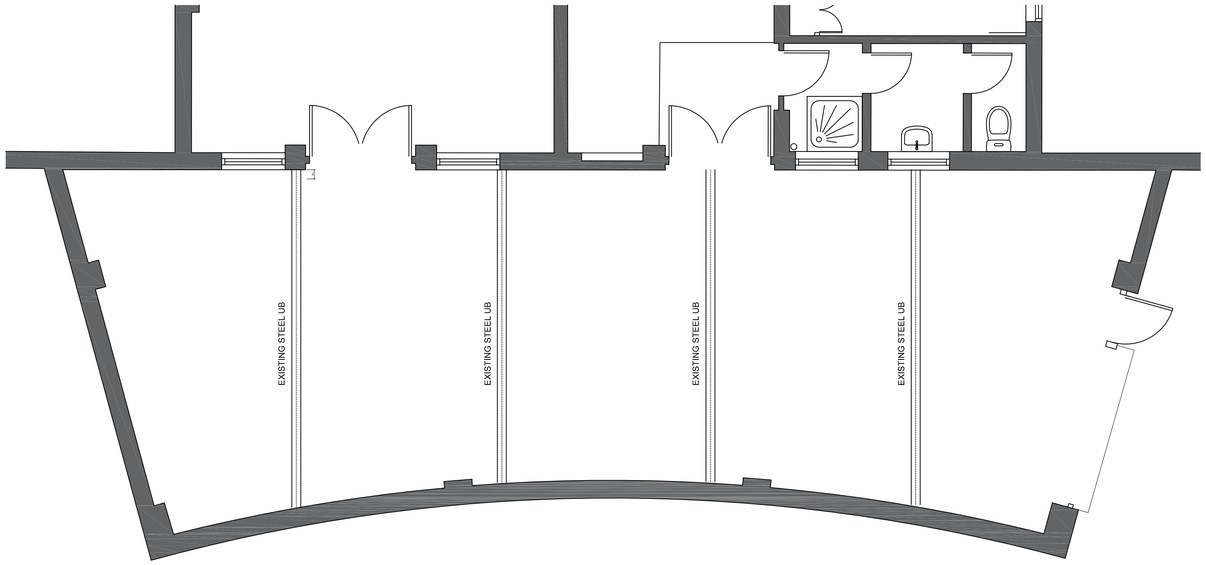

EXISTING STRUCTURAL STEELWORK COURTYARD GA

Scale 1:50

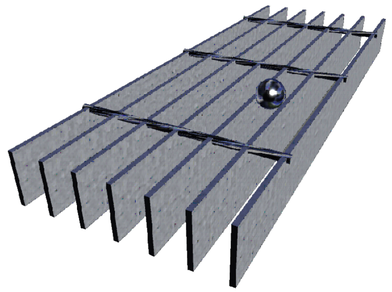

3D ELEVATION OF LIONWELD KENNEDY PRODUCT

(IMAGE SOURCED FROM WEBSITE)

Scale 1:50

KEY

SPAN OF LIONWELD KENNEDY (LK) SAFEGRID UTILITY GRATING 25x5 TRANSVERSE BARS AT 125 CTRS LANDED FLAT. GALVANISED FINISH

SOLID FINISH

OPEN MESH FINISH

EXISTING STEEL BEAMS

EXISTING ROOF SHEETING TO BE REMOVED PRIOR TO THE INSTALLATION OF THE NEW OPEN MESH FLOORING

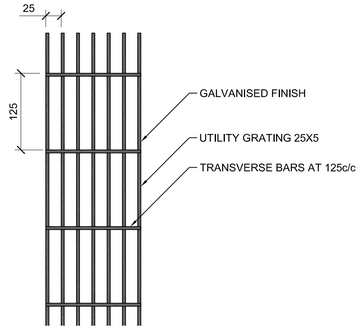

LIONWELD KENNEDY PRODUCT PLAN VIEW

Scale 1:5

GENERAL NOTES

THIS DRAWING IS TO BE READ IN CONJUNCTION WITH ALL OTHER RELEVANT ARCHITECTURAL, ENGINEERING DRAWINGS AND SPECIFICATIONS.

DO NOT SCALE OFF THIS DRAWING. ALL DETAILS AND DIMENSIONS ARE TO BE CHECKED BY THE CONTRACTOR/FABRICATOR PRIOR TO COMMENCEMENT OF CONSTRUCTION/FABRICATION. ANY DISCREPANCIES ARE TO BE REPORTED TO THE ENGINEER.

THE CONTRACTOR IS RESPONSIBLE FOR THE STABILITY OF THE STRUCTURE DURING CONSTRUCTION.

ALL LEVELS TO BE CONFIRMED.

ALL DIMENSIONS ARE IN MILLIMETRES UNLESS NOTED OTHERWISE.

DEMOLITION NOTES

A DETAILED METHOD STATEMENT FOR THE PROPOSED DEMOLITION WORKS MUST BE PREPARED AND SUBMITTED TO THE TEMPORARY WORKS CO-ORDINATOR PRIOR TO ANY WORKS COMMENCING.

BEFORE STARTING WORK, EXAMINE ALL AVAILABLE INFORMATION, CARRY OUT A SURVEY OF THE STRUCTURE(S), SITE AND SURROUNDING AREA, AND SUBMIT A SURVEY AND REPORT AND METHOD STATEMENT TO THE TEMPORARY WORKS CO-ORDINATOR COVERING ALL RELEVANT MATTERS LISTED BELOW AND IN THE HEALTH AND SAFETY EXECUTIVE GUIDANCE NOTE GS29/1 PARAGRAPH 32:

DEMOLISH STRUCTURE(S) IN ACCORDANCE WITH BS 6187 AND HEALTH AND SAFETY EXECUTIVE GUIDANCE NOTES GS29/1, 3 AND 4.

OPERATIVES MUST BE APPROPRIATELY SKILLED AND EXPERIENCED FOR THE TYPE OF WORK AND HOLD OR BE TRAINING TO OBTAIN RELEVANT CITB CERTIFICATES OF COMPETENCE.

SITE STAFF RESPONSIBLE FOR THE SUPERVISION AND CONTROL OF THE WORK ARE TO BE EXPERIENCED IN THE ASSESSMENT OF THE RISKS INVOLVED AND IN THE METHODS OF DEMOLITION TO BE USED.

REDUCE DUST BY REGULARLY SPRAYING DEMOLITION WORKS WITH WATER.

ADEQUATELY PROTECT PARTS OF EXISTING STRUCTURE(S) WHICH ARE TO BE KEPT IN PLACE.

PREVENT DEBRIS FROM OVERLOADING ANY PART OF THE STRUCTURE WHICH IS NOT TO BE DEMOLISHED.

LEAVE PARTLY DEMOLISHED STRUCTURE(S) IN A STABLE CONDITION, WITH ADEQUATE TEMPORARY SUPPORT AT EACH STAGE TO PREVENT RISK OF UNCONTROLLED COLLAPSE.

PREVENT ACCESS TO UNAUTHORISED PERSONS TO PARTIALLY DEMOLISHED STRUCTURE(S). LEAVE SAFE OUTSIDE WORKING HOURS.

CLEAR AWAY ALL DEBRIS AND LEAVE THE SITE IN A TIDY CONDITION ON COMPLETION.

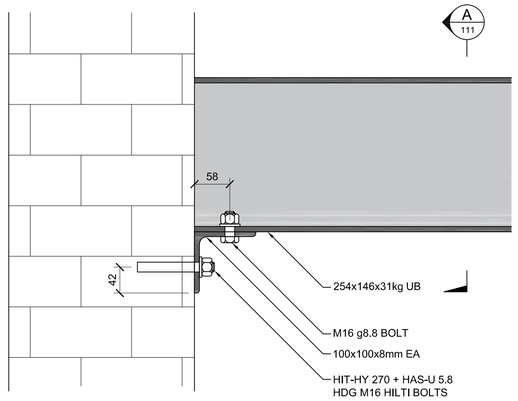

DETAIL A - ELEVATION

Scale 1:5

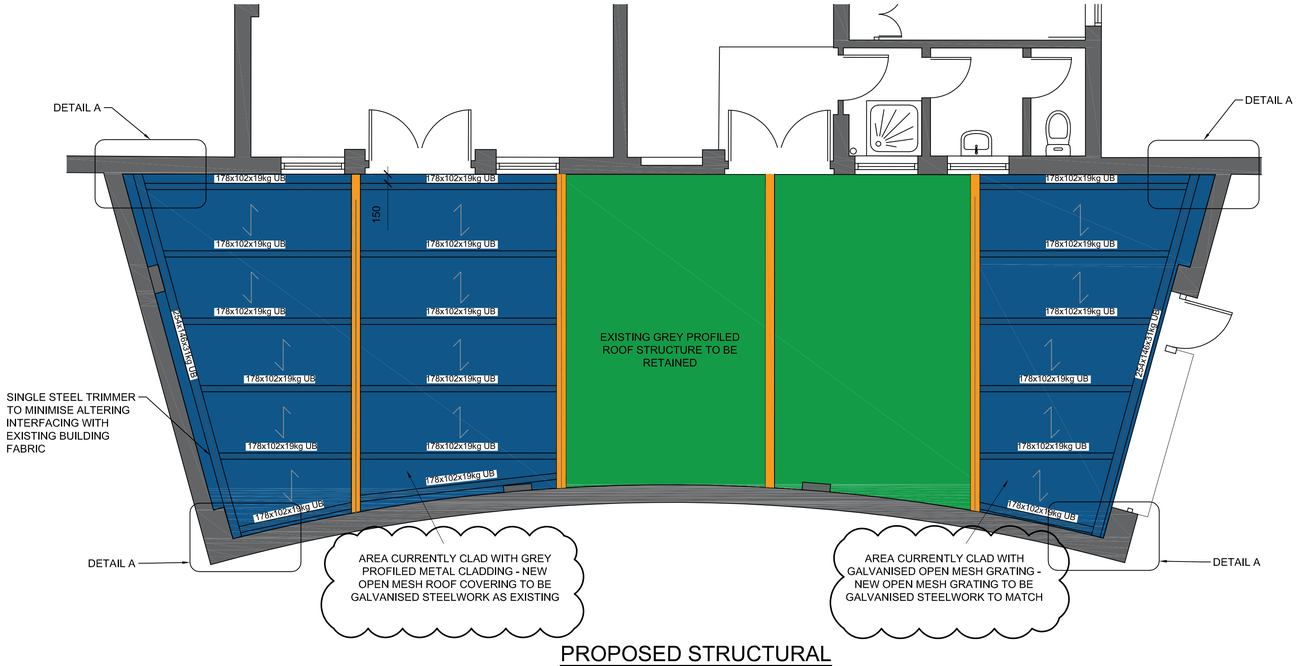

PROPOSED STRUCTURAL STEELWORK COURTYARD GA

Scale 1:50

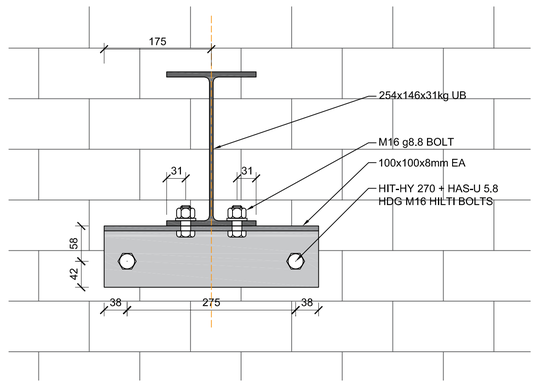

DETAIL A - SECTION A-A

Scale 1:5

Rev	Date	Description	By	Check
06	20/08/21	NOTES ON FINISHES ADDED FOR PLANNING PURPOSES	OB	JG
05	09/06/21	CLIENT/LA COMMENTS	OB	JG
04	07/06/21	CLIENT COMMENTS	OB	JG
03	10/05/21	CLIENT COMMENTS	OB	JG
02	21/04/21	CLIENT COMMENTS	OB	JG
01	16/04/21	ISSUE FOR INFORMATION	OB	JG

COPYRIGHT- THE COPYRIGHT OF THIS DRAWING IS VESTED IN CLANCY CONSULTING. IT SHALL NOT BE USED WITHOUT PERMISSION BY ANYONE FOR ANY PURPOSE. DO NOT SCALE THIS DRAWING ELECTRONICALLY OR MANUALLY. WORK TO FIGURED DIMENSIONS ONLY. ALL DIMENSIONS ARE IN MILLIMETRES UNLESS STATED OTHERWISE. DO NOT TURN ON LAYERS THAT HAVE BEEN TURNED OFF. DO NOT THAW LAYERS THAT HAVE BEEN FROZEN.

Client	ENGIE
Project	BLACKLEY CREMATORIUM
Office	LIVERPOOL
Discipline	STRUCTURAL
App.	JG
Title	COURTYARD ROOF WORKS
Scale @ A1	AS SHOWN
Status	INFORMATION

clancy consulting
www.clancy.co.uk
Birmingham 0121 200 3500 · Glasgow 0141 222 2220 · Liverpool 0151 227 3000 · London 020 3077 6870 · Manchester 0161 615 6000 · Newcastle 0191 221 0102 · Norwich 01603 305190 · Prestwick 01292 475375 · Reading 0118 941 7888

Originator	Job Number	Discipline	Building/Zone
CCL	4/7942	S	ALL
Type	**Level**	**Drawing No.**	**Revision**
GA	GRN	111	06