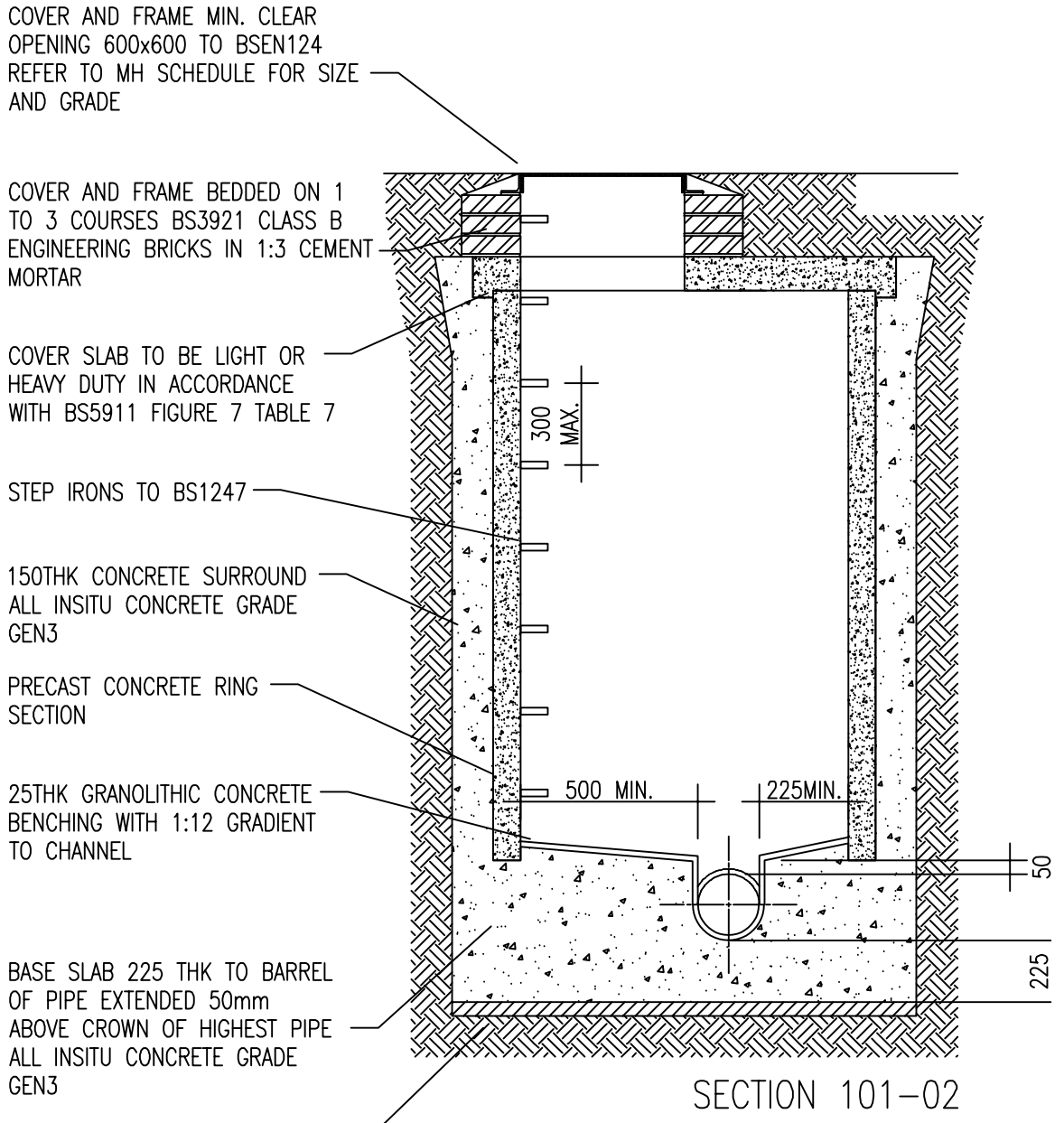

SECTION 101–02

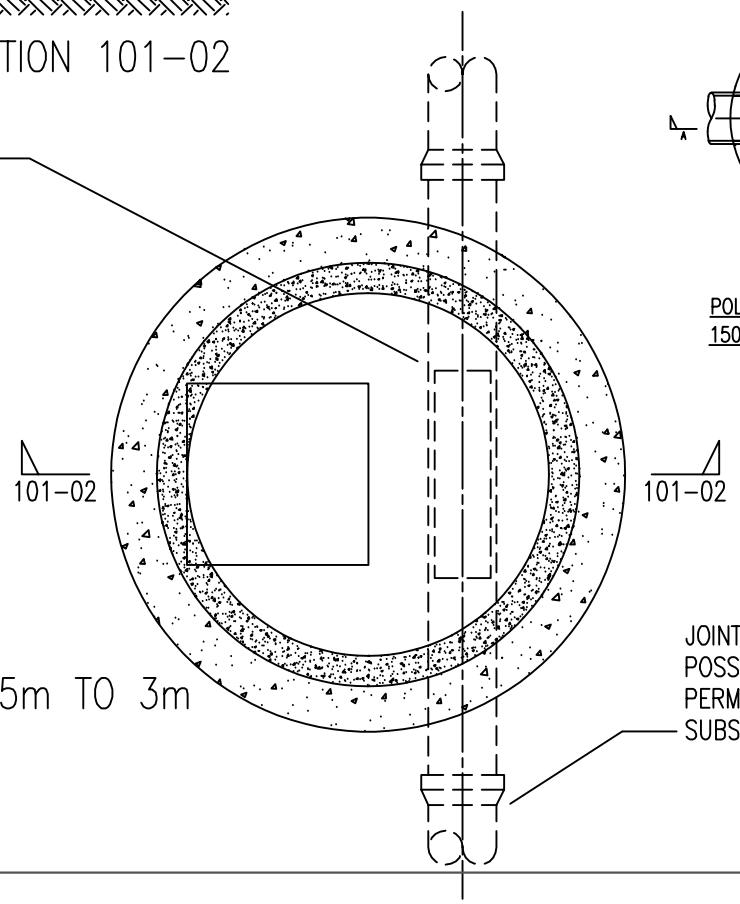

TYPICAL MANHOLE DETAIL

DEPTH FROM COVER LEVEL TO SOFFIT OF PIPE 1.5m TO 3m

SCALE 1:25

0 250 500

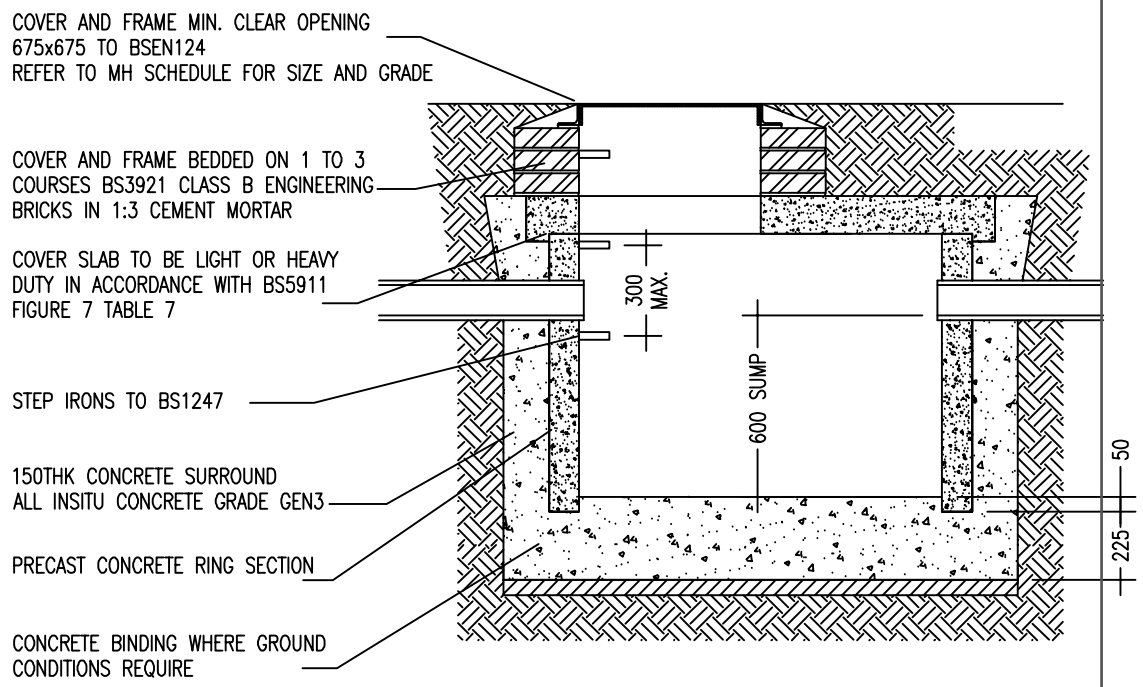

TYPICAL CATCHPIT MANHOLE DETAIL

SCALE 1:20

0 200 400

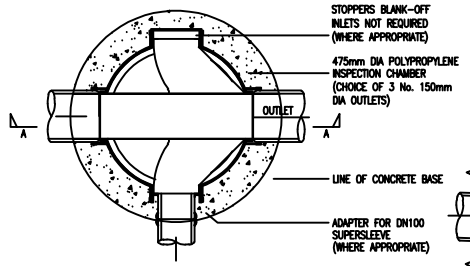

POLYPROPYLENE INSPECTION CHAMBER FOR 150mm DIA. PIPES (DEPTH UP TO 1200mm)

SCALE 1:25

0 250 500

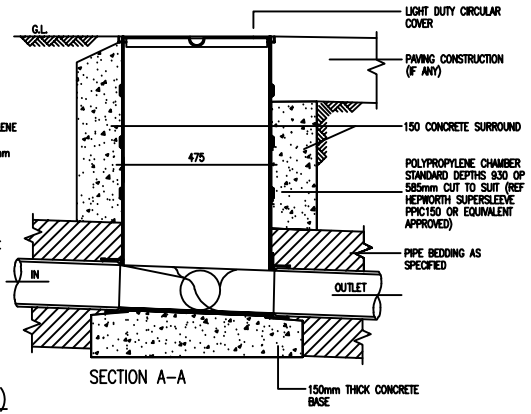

SECTION A–A

Notes:

Drawing were prepared from a visual survey only

REV	DESCRIPTION	BY	DATE

STATUS:

FT Consulting Engineers
6 Green Apron Park
North Berwick
EH39 4RE
07407058188
fergaltalty@yahoo.co.uk

CLIENT: AM Sports

ARCHITECT: FT Consulting

SITE: Goals
3 Irish Town Way, Cheetham Hill, Manchester M8 0AE

TITLE: Details 3

SCALE AT A3:	DATE:	DRAWN:	CHECKED:
As Shown	03/06/2021	FT	FT

PROJECT NO:	DRAWING NO:	REVISION:
P119	A105	