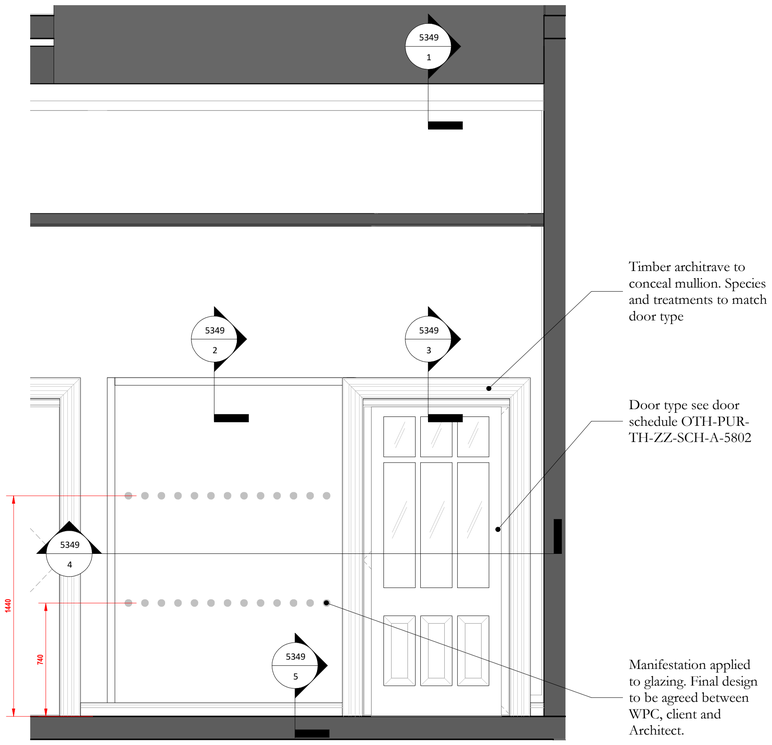

6 **Elevation 4 - a**
Scale: 1 : 20

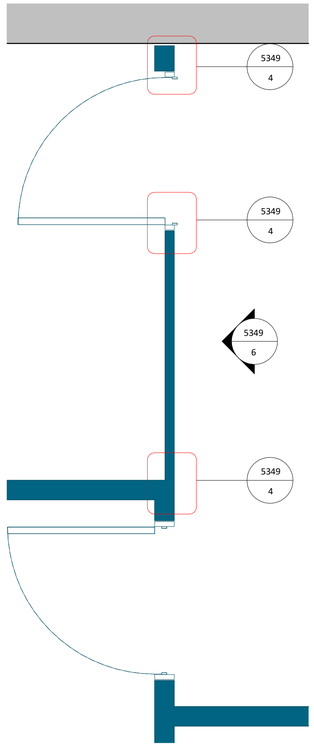

Detailed Plan
1 : 20

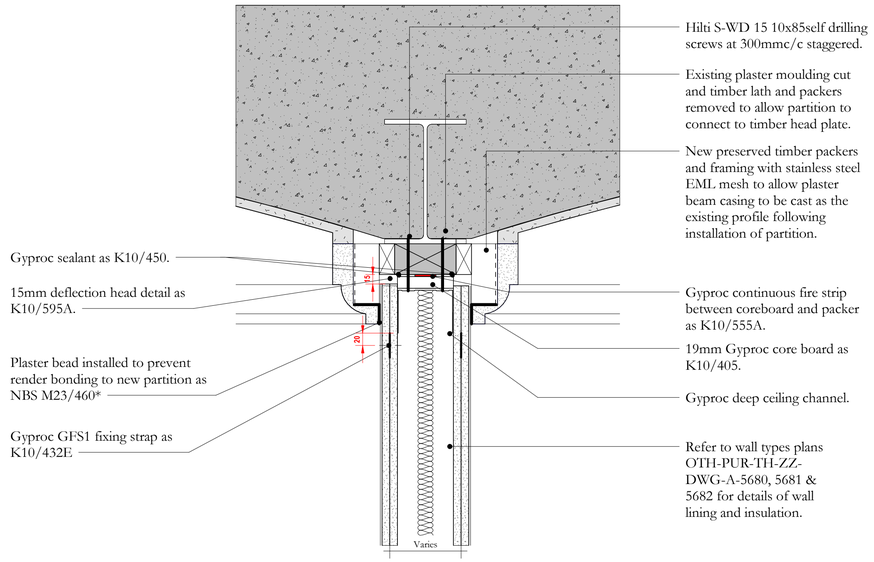

1 **Head Detail to Existing Steel Beam Encasement**
Scale: 1 : 5

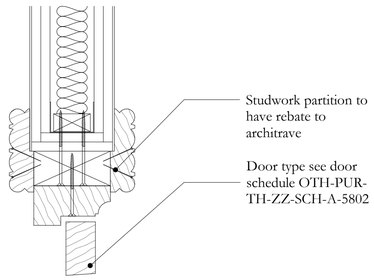

3 **Door Head detail**
Scale: 1 : 5

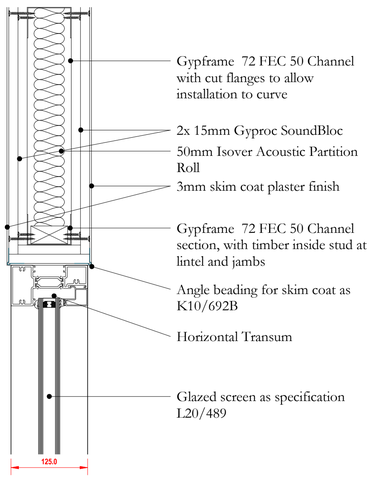

2 **Detail Section - Partition to Mullion Junction**
Scale: 1 : 5

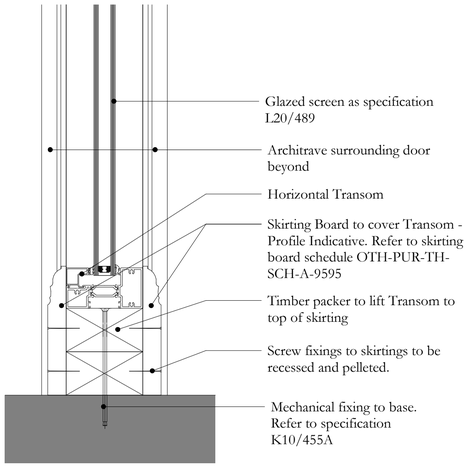

5 **Concealed Transom Skirting Detail**
Scale: 1 : 5

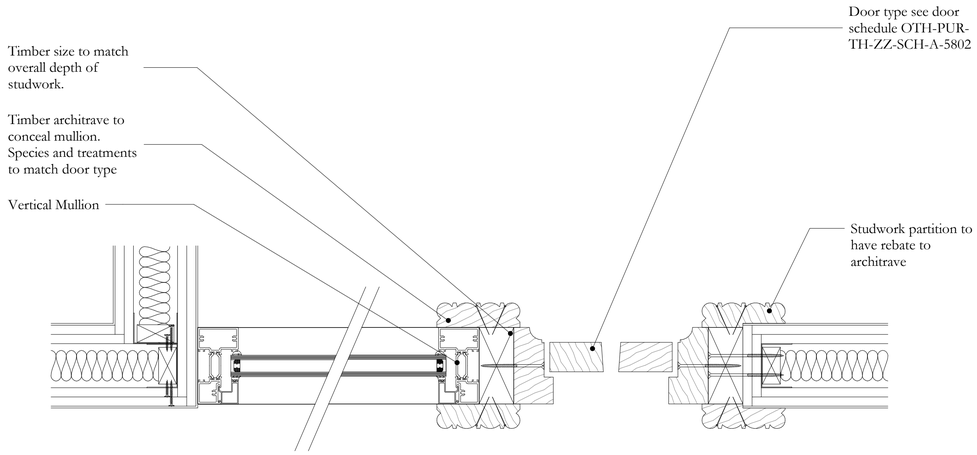

4 **Concealed Mullion Architrave detail**
Scale: 1 : 5

Scale Bars to be used as guidance only - refer to sheet size below

1:100	mm		1000		3000		5000		7000								
1:200	mm				5000		8000		12000		16000						
1:500	M		5		15		25		35								
1:1250	M	10		30		50		70		90							

Notes:
Drawings are based on survey data and may not accurately represent what is physically present.
Do not scale from this drawing. All dimensions are to be verified on site before proceeding with the work.
All dimensions are in millimeters unless noted otherwise.
Purcell shall be notified in writing of any discrepancies.

Key Plan

Refer to metal glazed screen location plans for layouts and locations of partitions.

OTH-PUR-TH-03-DWG-A-5718
OTH-PUR-TH-03-DWG-A-5719

Refer to Specification

OTH-PUR-TH-ZZ-SPE-A-5916
OTH-PUR-TH-ZZ-SPE-A-5927

Carpentry, Timber Framing, First Fix
OTH-PUR-TH-ZZ-SPE-A-5926 K10 Gypsum Board Dry Linings/ Partitions/ Ceilings
OTH-PUR-TH-ZZ-SPE-A-5925 J40 Flexible sheet waterproofing/ damp proofing
OTH-PUR-TH-ZZ-SPE-A-5932 P10 Sundry Insulation/ Proofing Work
OTH-PUR-TH-ZZ-SPE-A-5921 P20 Unframed Isolated Trims/Skirtings/Sundry Items
OTH-PUR-TH-ZZ-SPE-A-5936 Z20 Fixings
OTH-PUR-TH-ZZ-SPE-A-5939 Z22 Sealants
SPECS TO BE UPDATED
OTH-PUR-TH-ZZ-SPE-A-5927 - L40 General Glazing
OTH-PUR-TH-ZZ-SPE-A-5916 - L20 Doors/Shutters/Hatches

L20/489 for Smart Wall Glazed Partition specification

ISSUE	DATE	APPROVED	DRAWN	DESCRIPTION
-	29/10/2021	DW	AH	First Issue

OUR TOWN HALL PROJECT

PURCELL

Project Office, Room 308, Town Hall, MANCHESTER M60 2L1
+44 (0) 7970 097 432
www.purcelluk.com

PROJECT STATUS	RIBA STAGE 4
CLIENT	Manchester City Council
PROJECT	OUR TOWN HALL
DRAWING TITLE	Glazed Partition Typical Detail
SIZE & SCALE	A1: As indicated
DRAWING STATUS	FOR TENDER
JOB NUMBER	236959
DRAWING NO.	OTH-PUR-TH-ZZ-DWG-A-5349
REV	-

© PURCELL 2019. PURCELL ® IS THE TRADING NAME OF PURCELL ARCHITECTURE LTD.

29/10/2021 09:57:36