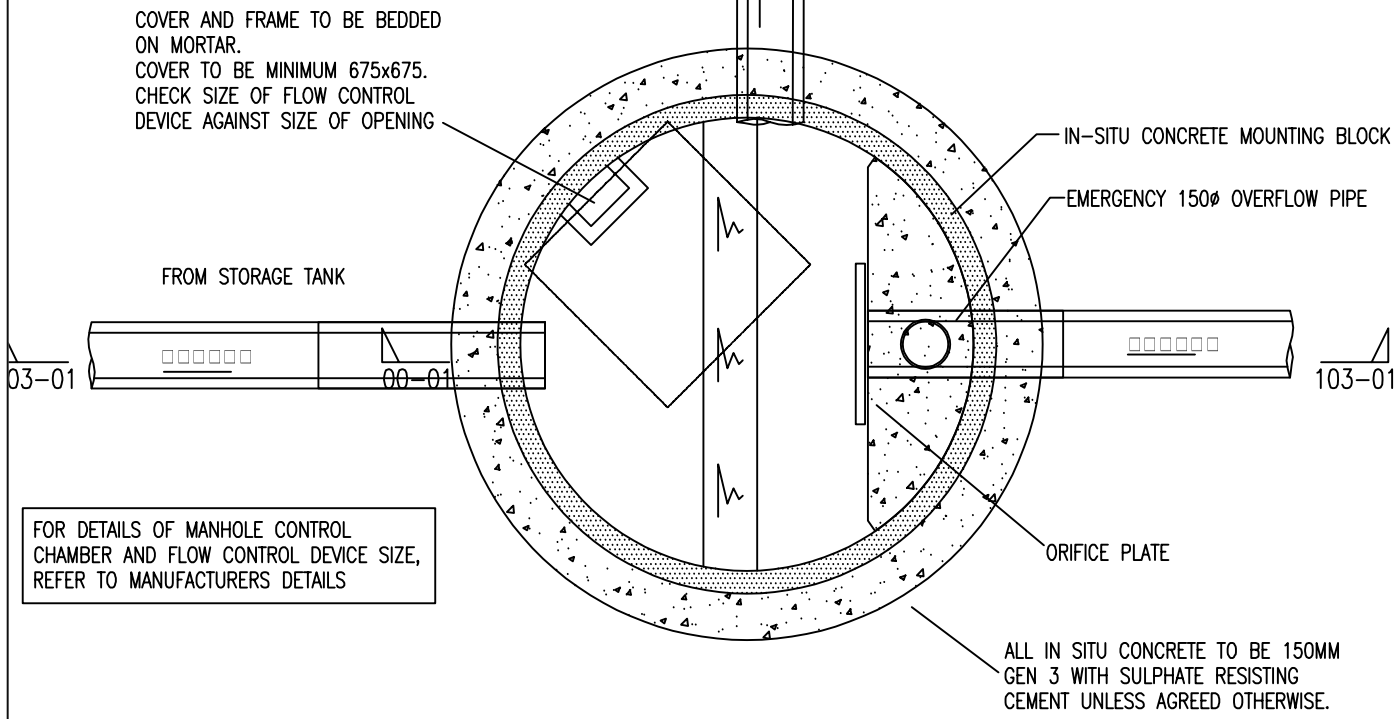

FLOW CONTROL CHAMBER PLAN

SCALE 1:20

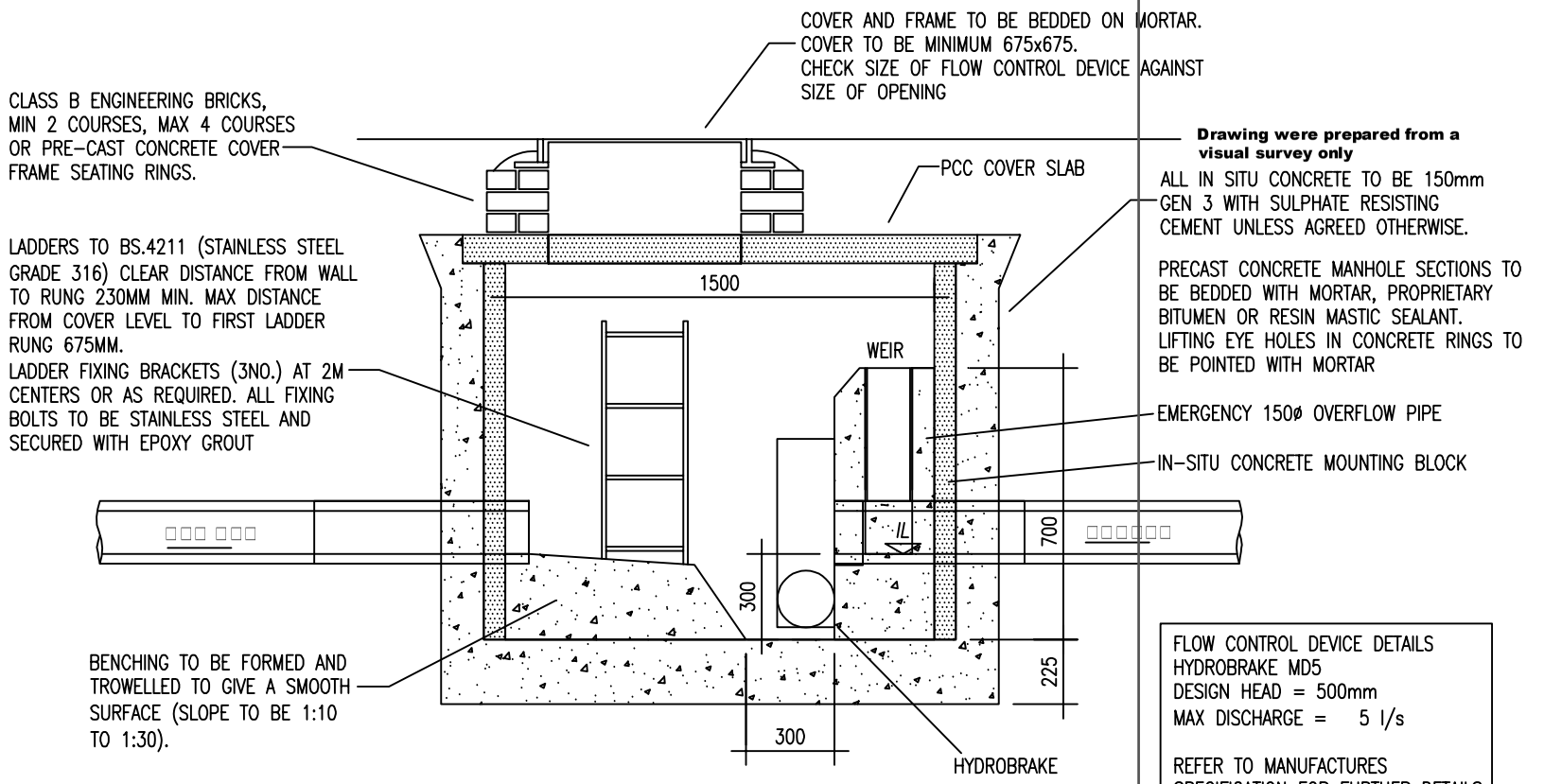

SECTION 102-01 FLOW CONTROL CHAMBER

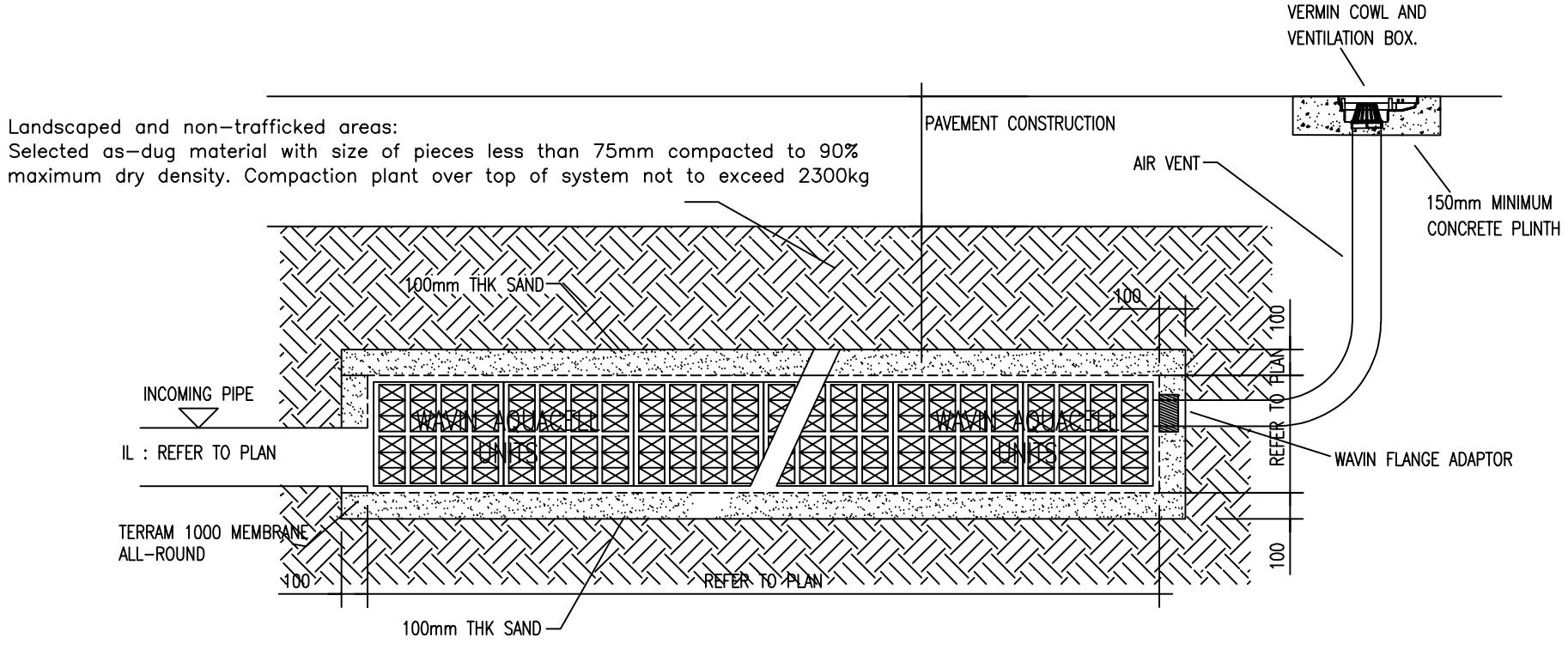

CELLULAR STORAGE TANK DETAIL

SCALE 1:20

Notes:

Drawing were prepared from a visual survey only

ALL IN SITU CONCRETE TO BE 150mm GEN 3 WITH SULPHATE RESISTING CEMENT UNLESS AGREED OTHERWISE.

PRECAST CONCRETE MANHOLE SECTIONS TO BE BEDDED WITH MORTAR, PROPRIETARY BITUMEN OR RESIN MASTIC SEALANT. LIFTING EYE HOLES IN CONCRETE RINGS TO BE POINTED WITH MORTAR

FLOW CONTROL DEVICE DETAILS
HYDROBRAKE MD5
DESIGN HEAD = 500mm
MAX DISCHARGE = 5 l/s

REFER TO MANUFACTURES SPECIFICATION FOR FURTHER DETAILS

REV	DESCRIPTION	BY	DATE

STATUS:

FT Consulting Engineers
6 Green Apron Park
North Berwick
EH39 4RE
07407058188
fergaltalty@yahoo.co.uk

CLIENT: AM Sports

ARCHITECT: FT Consulting

SITE: Goals
3 Irish Town Way, Cheetham Hill, Manchester M8 0AE

TITLE: Details 2

SCALE AT A3:	DATE:	DRAWN:	CHECKED:
As Shown	03/06/2021	FT	FT

PROJECT NO:	DRAWING NO:	REVISION:
P119	A104	