Technical Submittal Sheet

Project No **Belle Vue Academy**
Project No **376948/001**
Directed to: **Sir Robert McAlpine**

Form 49 (29.03.04)

Date: **23.11.21**
Revision: **C01**
Status: **S4**

Plant Item: Gas Fired Boilers
Integral Ref: 009433-IUL-XX-ZZ-SB-M-TS4 - Gas Fired Boilers

Information "Issued for Approval"

Please find attached technical information for the Gas boilers
Proposed manufacturer is Hamworthy, unit model reference: Varmax 600 floor standing boiler

Print Name : M Chilton - Mechanical Engineer

Approval required By: **30/11/2021**

Response;

Signed: _____ **For:** _____

Print Name : _____ **Date** _____

Hamworthy

Heating *at work.*

Varmax

- Floor standing
- Stainless steel condensing boiler
- Wide differential temperature
- No dedicated primary circuit required

UP TO
637KW
FROM A SINGLE BOILER

10 MODELS, OUTPUTS 127 - 637kW

up to 96% Gross Seasonal Efficiency | Nat Gas LPG | up to 5:1 Turndown | 5 Yr Heat Exchanger Warranty | ErP Part L Compliant

CONTENTS

Introduction & features 2
Technical data & dimensions 4
Electrical connections 7
Specification 8
Energy & load matching 13
Boiler sequence control strategies . . . 14
Controls for single boilers 15
Controls for multiple boilers 17
Flues 20
Application & water system 23
Condensate discharge & ventilation . . 24
Hydraulic schemes 25
Service & warranty 27
Complete your system 28
About Hamworthy 30

Maximum power, **simplified design**

The Varmax condensing boilers offer high outputs up to 637kW (at 50/30°C) from a single module and a simplified heating system design.

The large water capacity of the heat exchanger allows operation with wide differential temperatures. Combined with the internal circulation loop removes the need for a dedicated primary circuit with associated pumps, controls and low loss header.

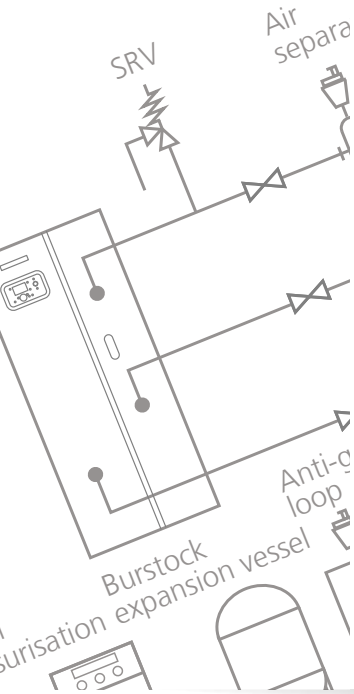

Efficiency and long life, suits a multitude of buildings

Varmax floor standing boilers are built around an entirely stainless steel fully welded heat exchanger. This gives exceptional tolerance to a wide range of system water conditions for corrosion resistance and a long life.

Choose from single boilers with outputs from 127kW to 637kW. Single boilers can be easily cascaded to match high demand heating projects.

Varmax boilers offer greater efficiency in split temperature systems and projects such as medium sized district heating schemes, due to separate high and low temperature return connections and operating with wide differential temperatures (ΔT).

Designed for use in sealed hydraulic systems only, all boiler models are pressure tested to 6 bar. Generous insulation assures standby losses are kept to a minimum.

Fully pre-mix burners with up to 5:1 turndown meet the ErP NOx criteria with emissions across the range lower than 55mg/kWh. A built in flue gas non-return valve simplifies flue system design whilst providing effective protection from re-circulation of flue gases through non-firing boilers.

Featuring comprehensive controls, Varmax boilers can manage heating systems including a domestic hot water cylinder and up to three independent heating circuits operating at different temperatures. With built in sequence control, multiple boilers can be managed without the need for an additional sequence control panel.

Key benefits

- Twin return connections
- Advanced sequence control for up to 16 boiler modules
- Wide differential temperature
- No minimum flow rates
- Low NO_x
- Easy access for service and system cleaning

Key features:

- Floor standing condensing boiler
- 10 single boilers with outputs (at 50/30°C): 127, 148, 191, 238, 290, 338, 415, 478, 558 and 637kW
- Natural gas and LPG (390 - 600 models Nat Gas only)
- Sealed systems only
- Up to 5:1 turndown ratio
- Up to 96% Gross Seasonal Efficiency
- Stainless steel heat exchanger
- Easy to cascade for higher output modular systems

Controls (Page 15)

- Built in advanced Navistem (Siemens LMS) controls as standard
- Boiler sequencing cascade controller
- Room & outside temperature sensors
- LPB bus communications modules
- Zone control
- DHW cylinder sensor kit

Flues (Page 20)

- B23/B23P Open flue systems
- C13 Room sealed flue systems
- C33 Room sealed flue systems (vertical)
- C53 Room sealed flue systems (twin flue)

Service & warranty (Page 27)

- 5-year heat exchanger warranty
- Range of service options
- Commissioning

Anatomy of the Varmax

1. Internal distributor pump
2. Control panel
3. Down firing pre-mix burner
4. Heat exchanger insulation
5. Drain valve
6. Flow connection
7. Combustion air inlet
8. Gas supply
9. Return connection - high temperature circuit
10. Secondary heat exchanger
11. Primary heat exchanger
12. Flue connection
13. Return connection - low temperature circuit
14. Access door for condensate trap
15. Levelling feet

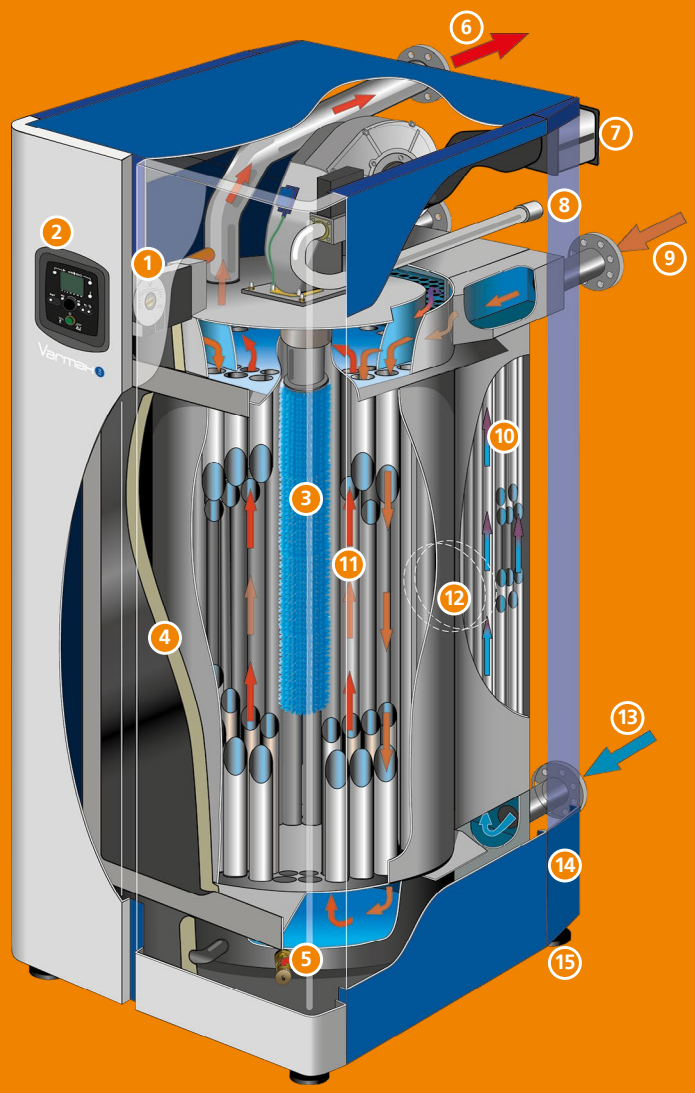

10 MODELS

127-637 kW OUTPUT

Varmax boiler technical data

Single boiler models 120, 140, 180, 225, 275, 320, 390, 450, 525, 600

	Boiler Model	Units	120	140	180	225	275	320	390	450	525	600
Energy	Building regulations Part L seasonal efficiency	% gross	96.13	96.13	96.33	96.33	96.24	96.24	96.22	96.22	96.22	96.22
	Boiler output - maximum 80/60°C, NG & LPG*	kW	117	136	175	219	268	312	381	439	513	586
	Boiler output - maximum 50/30°C, NG & LPG*	kW	127	148	191	238	290	338	415	478	558	637
	Boiler output - minimum 80/60°C, Nat Gas.	kW	27.3	27.2	41.8	41.8	64.3	64.3	85	84.7	118	118
	Boiler output - minimum 80/60°C, LPG	kW	38	37.8	61.3	61.3	87.6	87.7	N/A	N/A	N/A	N/A
	Boiler input (gross) - maximum, NG & LPG*	kW	120	140	180	225	275	320	390	450	525	600
	Boiler input (net) - maximum, NG & LPG*	kW	108	126	162	203	248	288	351	405	473	541
	Standby loss	W	182	182	213	213	259	259	311	311	461	461
Water	Water content	litres	116	116	151	151	239	239	287	287	420	420
	System design flow rate @ 30°C ΔT rise	l/s	0.9	1.1	1.4	1.7	2.1	2.5	3	3.5	4.08	4.69
	Water side pressure loss @ 30°C ΔT rise	mbar	27	33	25	36	36	53	34	43	60	75
	System design flow rate @ 20°C ΔT rise	l/s	1.4	1.6	2.1	2.6	3.2	3.7	4.6	5.3	6.14	7
	Water side pressure loss @ 20°C ΔT rise	mbar	60	75	57	81	82	119	77	97	86	107
	System design flow rate @ 11°C ΔT rise	l/s	2.5	2.9	3.8	4.7	5.8	6.8	8.3	9.5	11.17	12.77
	Water side pressure loss @ 11°C ΔT rise	mbar	198	248	188	268	271	393	255	321	335	450
	Minimum water pressure	barg	1	1	1	1	1	1	1	1	1	1
	Maximum water pressure	barg	6	6	6	6	6	6	6	6	6	6
	Minimum flow temperature setting	°C	22	22	24	24	20	20	23	23	22	22
	Maximum flow temperature setting	°C	85	85	85	85	85	85	85	85	85	85
Gas	Gas flow rate, NG (G20) - maximum	m³/hr	12.7	14.8	19.1	23.8	29.1	33.9	41.3	47.6	55.6	63.5
	Maximum gas inlet pressure, Nat Gas	mbar	25	25	25	25	25	25	25	25	25	25
	Nominal inlet pressure, Nat Gas	mbar	20	20	20	20	20	20	20	20	20	20
	Minimum gas inlet pressure, Nat Gas	mbar	17	17	17	17	17	17	17	17	17	17
	Gas flow rate, LPG (G31) - maximum	m³/hr	4.9	5.7	7.4	9.2	11.3	13.1	N/A	N/A	N/A	N/A
	Nominal inlet pressure, LPG	mbar	37	37	37	37	37	37	N/A	N/A	N/A	N/A
Flue	Maximum flue gas temperature @ 80/60°C Nat Gas	°C	60.8	62.1	61	62.3	61.7	63.4	62.5	64.8	64.4	66.6
	Pressure at boiler flue spigot @ 80/60°C Nat Gas B23P	Pa	200	200	115	165	122	176	180	193	160	200
	Maximum flue gas temperature @ 80/60°C LPG	°C	60.3	62.6	60.3	62.2	63	65.4	N/A	N/A	N/A	N/A
	Pressure at boiler flue spigot @ 80/60°C LPG B23P	Pa	167	200	103	136	118	157	N/A	N/A	N/A	N/A
	Dry NOx emission**	mg/kWh	30	30	30	30	40	40	35	35	55	55
	NOx Class		6	6	6	6	6	6	6	6	6	6
Electrical	Electrical supply		230V, 1Ph, 50Hz	230V, 1Ph, 50Hz	230V, 1Ph, 50Hz	230V, 1Ph, 50Hz	230V, 1Ph, 50Hz	230V, 1Ph, 50Hz	230V, 1Ph, 50Hz	230V, 1Ph, 50Hz	230V, 1Ph, 50Hz	230V, 1Ph, 50Hz
	Power consumption - maximum boiler modulation	W	204	311	179	320	238	352	480	660	697	960
	Start current (per module)	Amp	3.5	5.4	3.1	5.6	4.1	6.1	8.3	11.5	11.9	16.3
	Run current (per module)	Amp	0.89	1.35	0.78	1.39	1.03	1.53	2.09	2.87	3	4.17
	Approx shipping weight	kg	340	340	393	393	502	502	592	592	800	800
	Noise emission @1m: @max. modulation	dB (A)	65	65	61	61	61	61	68	68	68	68

*390kW, 450kW, 525kW and 600kW models Nat Gas only
**(0% excess oxygen, mg/kWh dry air free); NG/LPG

10 MODELS

127-637 kW OUTPUT

Varmax boiler dimensions

Single boiler models 120, 140, 180, 225, 275, 320, 390, 450, 525, 600

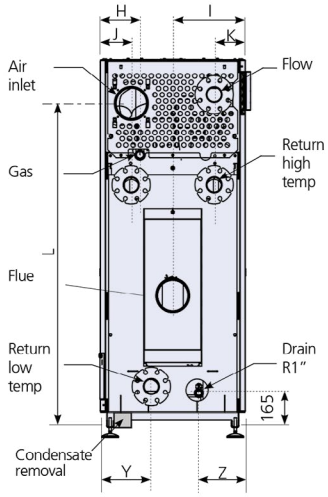

Rear View

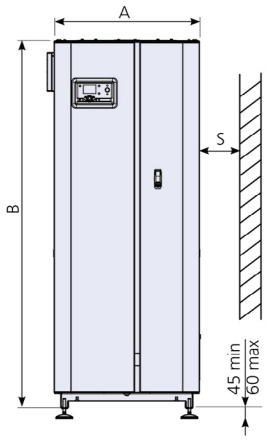

Front View

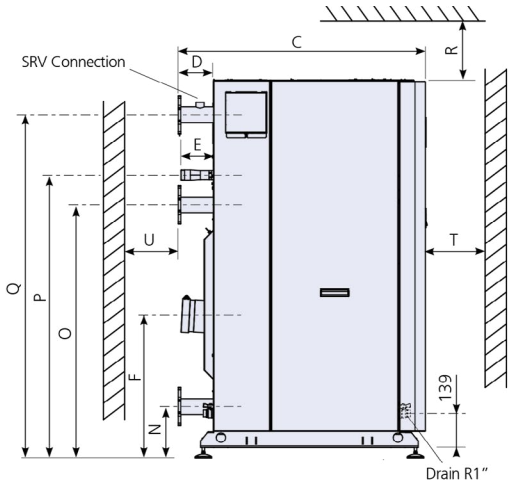

Side View

Note: All dimensions in mm unless otherwise stated.

Ref.		Units	120	140	180	225	275	320	390	450	525	600
A	Boiler width	mm	734	734	734	734	812	812	912	912	1161.0	1161.0
B	Boiler height	mm	1530	1530	1780	1780	1877	1877	2023	2023	2016.0	2016.0
C	Boiler depth	mm	1189	1189	1218	1218	1341	1341	1392	1392	1588.0	1588.0
D	Flow and return connection depth	mm	148	148	169	169	169	169	168	168	208.0	208.0
E	Gas connection depth	mm	103	103	150	150	109	109	92	92	92.0	92.0
F	Flue centreline height	mm	510	510	630	630	680	680	750	750	750.0	750.0
H	Gas connection centreline	mm	115	115	192	192	241	241	274	274	390.5	390.5
I	Flue connection centreline	mm	350	350	350	350	399	399	449	449	577.5	577.5
J	Air inlet centreline	mm	150	150	150	150	200	200	209	209	325.5	325.5
K	Flow and high temperature return centreline	mm	166	166	150	150	179	179	192	192	232.0	232.0
L	Air inlet centreline height	mm	1256	1256	1564	1564	1672	1672	1874	1874	1851.5	1851.5
N	Low temperature return centreline height	mm	182	182	197	197	196	196	206	206	196.5	196.5
O	High temperature return centreline height	mm	926	926	1171	1171	1265	1265	1402	1402	1402.0	1402.0
P	Gas centreline height	mm	1062	1062	1315	1315	1413	1413	1577	1577	1555.0	1555.0
Q	Flow centreline height	mm	1298	1298	1606	1606	1661	1661	1933	1933	1778.0	1778.0
R	Clearance top (for burner removal)	mm	150	150	320	320	263	263	427	427	427	427
S	Clearance side (left and right)	mm	450	450	450	450	450	450	450	450	450	450
T	Clearance front	mm	500	500	500	500	600	600	700	700	700	700
U	Clearance rear	mm	500	500	500	500	500	500	500	500	500	500
Y	Low temperature return centreline	mm	250	250	247	247	276	276	289	289	328.5	328.5
Z	Drain valve centreline	mm	237	237	224	224	270	270	283	283	323.5	323.5
	Flue connection diameter	mm	150	150	150	150	180	180	200	200	200.0	200.0
	Air inlet diameter	mm	150	150	150	150	180	180	180	180	180.0	180.0
	Gas connection	male	R 1 ¼"	R 1 ¼"	R 1 ½"	R 1 ½"	R2"	R2"	R2"	R2"	R2"	R2"
	Flow and return connection - flanges PN16	male/flange	R 2" Male	R 2" Male	DN65 / PN16	DN65 / PN16	DN80 / PN16	DN80 / PN16	DN80 / PN16	DN80 / PN16	DN100 / PN16	DN100 / PN16
	Safety relief valve connection	female	G 1"	G 1"	G 1"	G 1"	G 1 ¼"	G 1 ¼"	G 1 ¼"	G 1 ¼"	G 1 ¼"	G 1 ¼"

Varmax in cascade dimensions

Varmax boilers can be installed in a multiple boiler cascade. A built in flue gas non-return valve simplifies flue system design whilst providing effective protection from re-circulation of flue gases through non-firing boilers in a cascade.

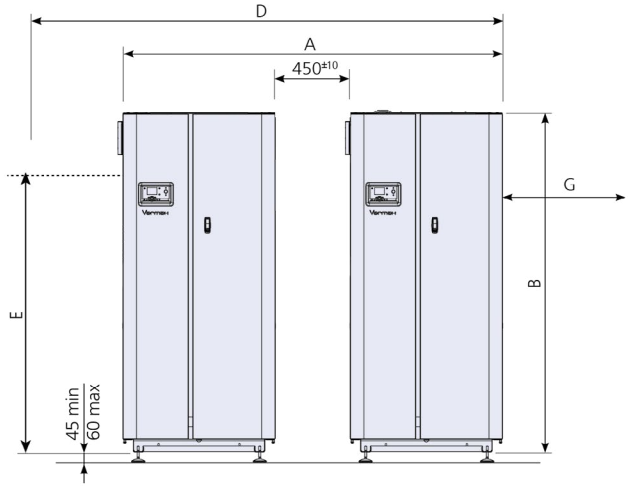

Front View

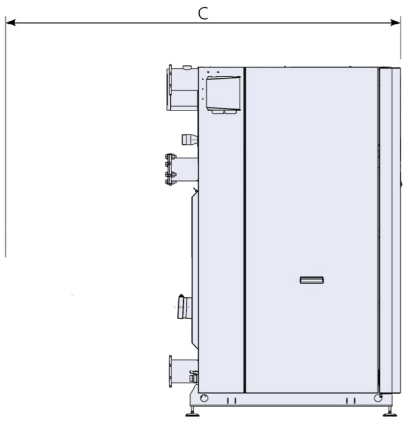

Side View

Note: All dimensions in mm unless otherwise stated.

			Varmax models			
Ref.		**Units**	**2 x 390**	**2 x 450**	**2 x 525**	**2 x 600**
A	Overall installed boilers width	mm	2259	2259	2772	2772
B	Boiler height	mm	2023	2023	2016	2016
C	Overall installed boilers depth	mm	2336	2336	2552	2552
D	Overall installed boilers width including flue header	mm	2778	2778	3291	3291
E	Flue header centreline height	mm	1657	1657	1657	1657

Note: For all other boiler dimensions refer to the dimensions page for single boilers (page 5).

Electrical connections

Connections to boiler

Low voltage connections

Terminal reference	Function	Electrical	Max load
H5	Programmable input for: 1 Remote interlock (external vfc switch)	24V DC	
H4	Not for customer use		
H1	Programmable input for: 1 0-10V analogue signal 2 Remote enable switch/time clock (vfc switch)	0-10V 24V DC	
B9	Input for outside air temperature sensor	Resistance input	
B3	Programmable input for DHW temperature: 1 QAZ36 DHW sensor kit input 2 Mechanical thermostat input (vfc switch)	Resistance input 24V DC	
BX3	Programmable input - spare		
BX2	Programmable input for: 1 Common flow sensor for master/slave sequence control (Master boiler only)		
BX1	Not for customer use		
H6	Not for customer use		

High voltage connections

Terminal reference	Function	Electrical	Max load
AUX1	Not used		
AUX2	Not used		
QX1	Programmable power supply for either: 1 Alarm – common fault 2 Non-Hamworthy boiler shunt pump/circulator	230v 50Hz 1Ph	1 Amp
QX3	Programmable power supply for: 1 Boiler shut off valve - motor open/motor close	230v 50Hz 1Ph	1 Amp
QX2	Programmable power supply for either: 1 DHW pump/circulator 2 Direct uncompensated heating circuit pump	230v 50Hz 1Ph	1 Amp
LMS 230V	Not for customer use		
L N E	Main power supply	230v 50Hz 1Ph	6.3 Amp

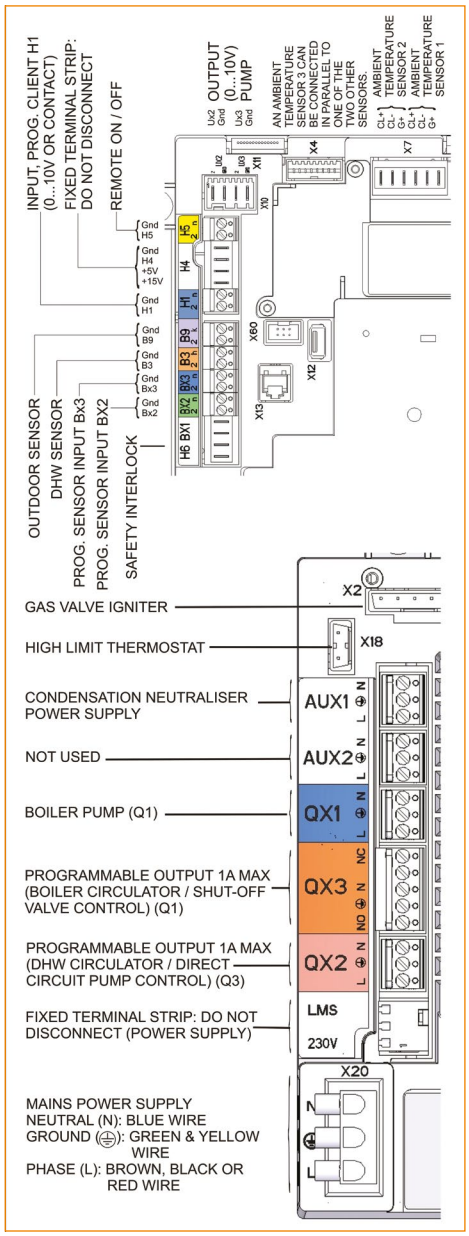

Electrical connections

There are a number of cable entry clamps located at the rear of the left-hand side casing panel. Cables carrying mains voltage (230V 50Hz 1Ph) for electrical supply and pump outputs should be routed via a separate conduit to low voltage cables serving sensors and enable circuits.

Power supply

An independent isolator and fused electrical supply is recommended for each boiler module. Supply 230 volt, 50Hz, single phase. Wiring external to the boiler must be installed in accordance with IET Regulations and any local regulations which apply. Wiring must be completed in heat resistant 3 core cable, (size 1.0 mm2 c.s.a.) Fascia fuse rating is 2 amp. External fuses should be 6 amp for all single boiler sizes.

To prevent drawing excessive current (>1 amp) through the boiler control panel, it is recommended that pumps are connected via contactors.

Specification

Boiler location

A flat and level plinth is recommended for siting the boiler. Any plinth and floor structure must be capable of supporting the boiler installation when full of water and should be non-combustible.

Boilers are provided with adjustable levelling feet for accommodating minor deviations in floor level and ensuring boilers are adjusted to correct level during installation.

The height of the plinth should allow the condensate outlets from the boilers to be connected into a drain that runs continuously downhill towards the discharge point with a minimum 3° slope.

Boiler casing

Wide opening hinged doors provide generous access to the boiler permitting burner maintenance to be carried out from the front of the boiler. On larger models where the top of the heat exchanger is high, a fold out step is provided easing access to the burner and electrical components located on top of the heat exchangers. Access for removing the burner vertically from the boiler is facilitated by a simple to remove section of the top casing secured using thumbwheel fixings.

For more complex procedures such as cleaning the heat exchanger, side casing panels also use a simple thumbwheel fixing allowing quick and easy removal. Access to the heat exchanger is via removable covers located behind easy to remove sections of insulation to the front and sides of the boiler assembly.

The casing is factory fitted and manufactured entirely from steel panels having a powder coated finish.

Primary circulation

Due to the volume of water within the Varmax boiler and the incorporation of an internal circulation loop and shunt pump, it is not necessary to install boilers within a dedicated primary circuit with associated pumps, controls or low loss header.

Having **no minimum flow rate requirement**, the Varmax boiler can operate with wide differential temperatures. As secondary system circulation is increased through the boiler, the internal circulation loop flow rate is modulated on a reducing basis to ensure high levels of system efficiency.

Secondary heating circuit pumps can be optimised to suit the requirements of the systems they serve without affecting boiler operation.

Operating efficiency

The heat exchanger uses a twin chamber primary and secondary design delivering exceptional efficiencies, exceeding 108% net part load when favourable system operating conditions exist. With full load net efficiencies exceeding 97% compliance with all known European and UK legislation is assured.

System connections

All boilers feature twin return connections that improve operating efficiency when installed within split temperature heating system designs. The return to the primary heat exchanger is suitable for high temperature heating circuits such as radiator loops and air convectors and the return to the secondary heat exchanger is suitable for low temperature circuits such as underfloor heating.

Using this method of connection ensures the low temperature circuit delivers condensing operation within the secondary heat exchanger whilst the primary heat exchanger may not be condensing. System operating efficiency gains up to 7% can be achieved by separating high and low temperature system connections to the boiler.

The outlet (flow) from the secondary heat exchanger converges with the return to the primary heat exchanger within the boiler with all flow leaving for the secondary circuits from the one boiler flow connection.

Where the entire heating system operates at just one temperature the return should be directly into the secondary heat exchanger. If operating at low temperatures, condensing operation will be within both secondary and primary heat exchangers.

Water pressure sensor

Boilers are protected from both high and low water pressure conditions. Water pressure within the boiler is monitored by the integral sensor and the boiler prevented from operating under the following conditions:

- High pressure. The burner is prevented from firing should internal boiler pressure reach 6 bar and released for operation once the pressure drops to 5.8 bar.
- Low pressure. The burner is reduced to 20% modulation should internal pressure drop below 1 bar, and prevented from firing should internal pressure drop below 0.8 bar. Once the internal pressure recovers to 1 bar the burner operates at 20% modulation until pressure reaches 1.2 bar when full burner modulation resumes.

Combustion air supply

Each boiler has the combustion air supply ducted from a dedicated connection on the rear face of the boiler directly on to the inlet of the fan. Having in built sound attenuation, noise emission associated with the air inlet is kept to a minimum.

Air inlet filter (1)

Each boiler is provided with an air inlet filter accessory for fitting on site where a B23 Type open flue is fitted. This effectively removes and prevents small dirt particles from entering the burner helping to maintain clean and efficient combustion between scheduled maintenance. Filter media is easily washed and replaced.

Fuel supply

Boilers are certified for operating with Natural Gas and LPG*. Factory set to operate with Natural Gas, boilers can be site adjusted for operation using LPG requiring parameter changes and gas orifice replacement as part of the commissioning process. Each boiler is supplied with all required parts for conversion to LPG.

Boilers must not be fired using LPG prior to being correctly converted. *The 390-600kW models are suitable for Nat Gas only.

Pre-mix burner

Varmax boilers feature down firing pre-mix burners for clean combustion with low ErP Class 6 emissions. Full modulation from 20% to 100% output is managed from the boiler control varying fan speed and gas input to deliver correct gas air ratio across the range of modulation.

The burner head features spark ignition with flame detection provided by flame ionisation probe. The burner itself is a cylindrical design with woven mesh finish and can be quickly removed and cleaned during scheduled maintenance.

An integrated flue gas non return valve is located between the burner and fan. This prevents flue gas recirculating through non firing modules in a multiple boiler configuration for easier installation with common flue headers.

Gas pressure switch (2)

Each boiler is provided with a gas inlet pressure switch to prevent the boiler should the incoming gas pressure drop below 12.5 mbar. Once gas pressure sufficiently recovers, boilers automatically resume operation.

Gas filter (3)

Each boiler has a gas inlet filter to prevent particles from the incoming gas supply as small as 50 microns reaching the gas valve.

Flue temperature protection

Each boiler is equipped with flue gas temperature protection to prevent boiler operation should the flue gas temperature rise in excess of 85° C.

Flue connection

Each boiler is provided with a flue connection on the rear face of the boiler exiting horizontally. The flue connection is provided with an integral seal, gas analysis test point and clamping band for securing the mating flue pipe.

All boilers are compatible with B23 Type open flue systems, with boiler models from 120 through to 320 additionally having room sealed flue options.

Condensate outlet

Condensate from the combustion process is safely removed from the heat exchanger via a syphon trap to outside of the boiler. This allows condensate to flow safely but prevents the escape of flue gases via the drain. The drain outlet is located on the rear face of the boiler at floor level.

Water temperature controls

Each boiler is provided with flow and return temperature sensors and a limit thermostat sensor. The boiler control monitors the sensors and makes adjustments to burner output to ensure a smooth delivery of temperature to the system.

Maximum operating temperature for each boiler is 85°C, with a manually resettable limit thermostat pre-set to 100°C.

1. Air filter

2. Gas pressure switch

3. Gas filter

Specification

Performance limits pre-commissioning

On delivery the boiler is limited both for maximum flow temperature (70°C) and maximum burner load (approx. 72%). This is to ensure performance is limited until the installation has been approved by the commissioning engineer who will as part of the commissioning procedure adjust both settings as required.

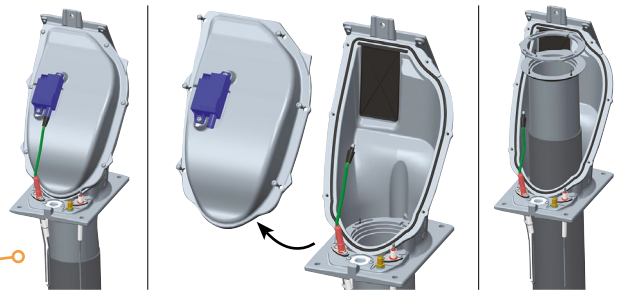

Burner maintenance

A simple cover is quickly removed providing access for burner removal.

Temperature and power output control

Each Varmax boiler is equipped with an internal flow distribution circuit that optimises circulation through the primary heat exchanger based on differential temperature. With the function of maintaining differential temperature across the primary heat exchanger to 20°C, the internal circulator optimally adjusts volume flow. Additionally, with increasing differential temperature burner output is limited to prevent cycling.

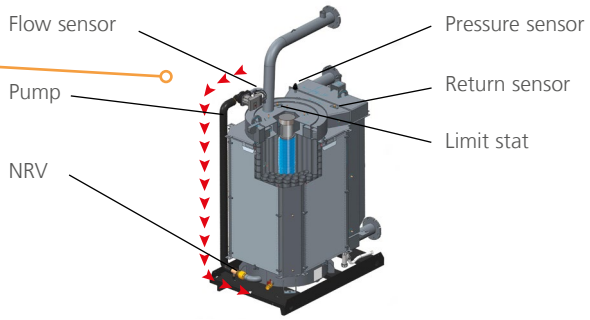

Varmax – Control of internal distribution circuit and burner output

System differential temperature	Up to 30°C	System differential temperature	From 30°C to 38°
Primary heat exchanger flow volume control	Flow optimised for 20°CΔt	Primary heat exchanger flow volume control	Flow optimised for 20°CΔt
Burner output control	Limited to max. 100%	Burner output control	Limited to max. 80%

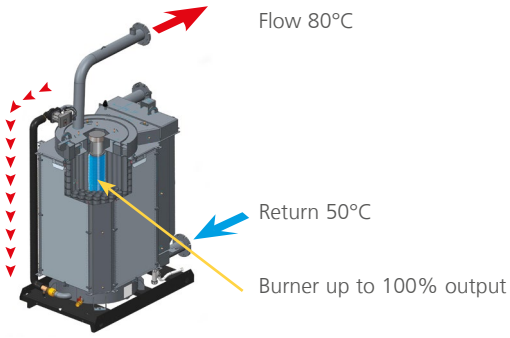

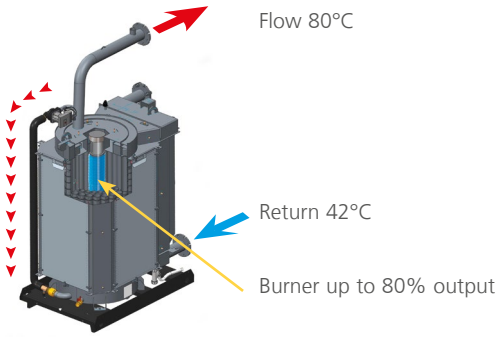

System differential temperature	From 38°C to 46°C	System differential temperature	Greater than 46°C
Primary heat exchanger flow volume control	Flow optimised for 20°CΔt	Primary heat exchanger flow volume control	Pump over-run period
Burner output control	Limited to max. 20%	Burner output control	Burner off

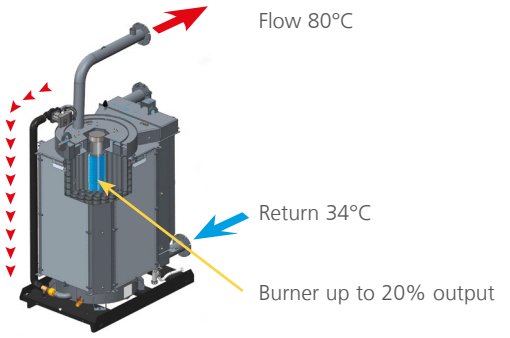

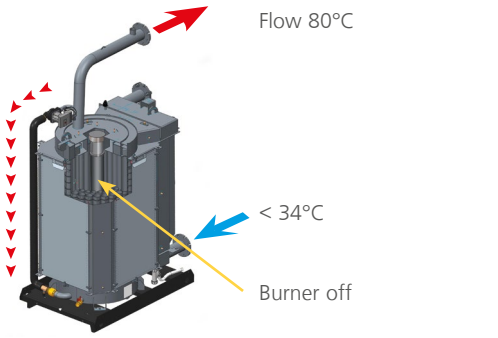

Heat exchanger

Varmax condensing boilers use a fully stainless steel precision engineered heat exchanger at the heart of every boiler. Manufactured from high grade 316l stainless steel the fully welded design uses automated robotic welding for repeated high quality manufacture.

Each heat exchanger, once manufactured, is subject to a dedicated 9 bar pressure test assuring hydraulic integrity prior to being assembled within the boiler.

The heat exchanger features primary and secondary chambers each with a dedicated return connection allowing direct connection to split temperature systems. Each chamber is equipped with its own low level drain valve.

Generous insulation ensures standby losses at less than 0.15%. The insulation extends the full length of flow and return pipes right up to site connections.

Twin return connections

Efficiency is maximised in split temperature systems through the use of high and low temperature return connections eg. Underfloor heating and DHW circuit.

Heat exchanger design

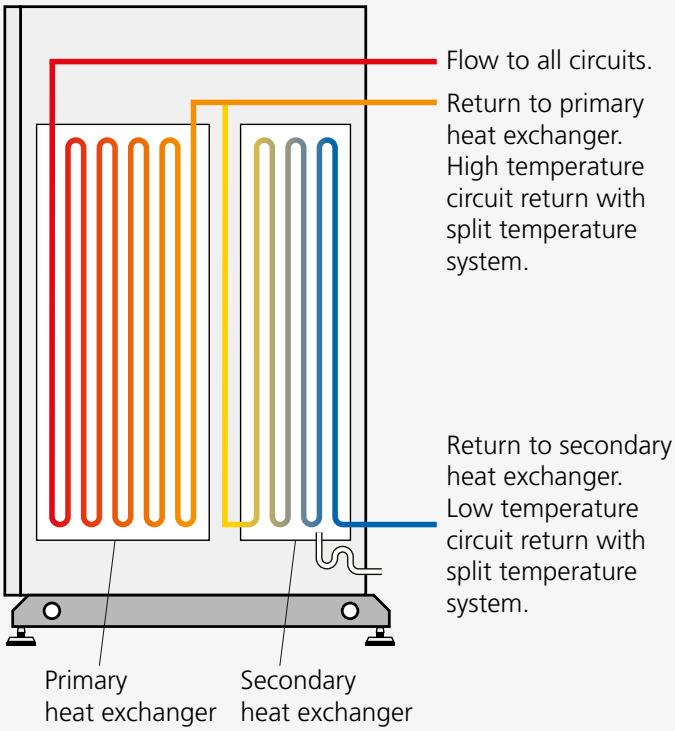

Twin return connection

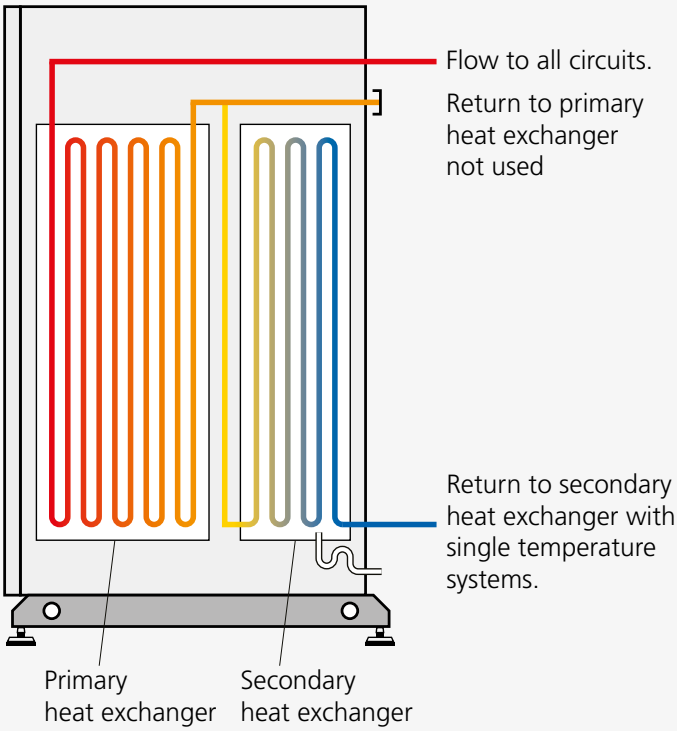

Single return connection

Hydraulic circuit design

Varmax boilers have a higher water content than more compact modular boilers resulting in high thermal inertia allowing these boilers to operate with wide differential temperature.

The heat exchanger is protected by an internal distribution circuit that ensures internal circulation when secondary circuit system pumps reduce flow to the boiler. When system flow to the boiler increases the circulation volume of the internal distribution circuit is reduced and eventually turned off once sufficient system flow through the boiler has been achieved.

Due to the hydraulic design of the boiler, system circuit design can be simplified without the need to install a dedicated primary circuit. This can save space in the plantroom and reduce the cost of installation.

Split temperature heating systems

Each boiler is provided with two return connections. The first return connection directs circulation only through the primary heat exchanger and is intended for use where split temperature heating systems are deployed. The higher operating temperature heating circuit should be connected to this return.

The second return connection directs circulation through the secondary heat exchanger and is intended for connection of the lower operating temperature heating circuit where split temperature heating systems are deployed. On leaving the secondary heat exchanger circulation converges with circulation returning from the higher operating temperature heating circuit and then jointly flows through the primary heat exchanger before exiting from the single flow connection. See Hydraulic Schemes 1,2 and 3 on pages 25-26.

Single temperature heating systems

Heating systems that only operate at a single temperature are accommodated by directing all return circulation through the secondary heat exchanger where it then also flows through the primary heat exchanger before exiting the boiler.

Minimum flow rates

Due to the high thermal inertia design of the boiler there are no minimum flow rates for either heat exchanger, both being tolerant of zero system flow conditions.

Multiple boiler system connection

For multiple boiler installations it is essential to direct circulation only through boilers in operation to fulfil the heat load. This is best achieved using motorised isolation valves in the flow from each boiler, which if controlled from the respective boiler can be motor open/motor close in operation. Stopping flow through non-firing boilers does not adversely affect operation and serves to ensure variable speed system pumps experience a change in head allowing their speed to adjust accordingly. See hydraulic scheme 3 on page 26.

Primary circuit design

Whilst the inclusion of a dedicated boiler primary circuit for multiple boilers is not essential, Varmax boilers may be installed using such circuits. Where a primary circuit is to be deployed, flow control through the boilers is essential to ensure efficient use of pumps. The recommended form of flow control is the use of individual boiler shunt pumps controlled from the respective boiler. The use of a pump contactor is essential if the electrical pump load is greater than 1 Amp.

When using primary circuit designs, due to the circuit only ever operating a one temperature set point, even if the flow temperature is variable, it is only necessary to direct the return circulation through the secondary heat exchanger return connection. In such installations there is no need to use the second return connection to the primary heat exchanger. See Hydraulic Scheme 4 on page 26.

Energy and load matching

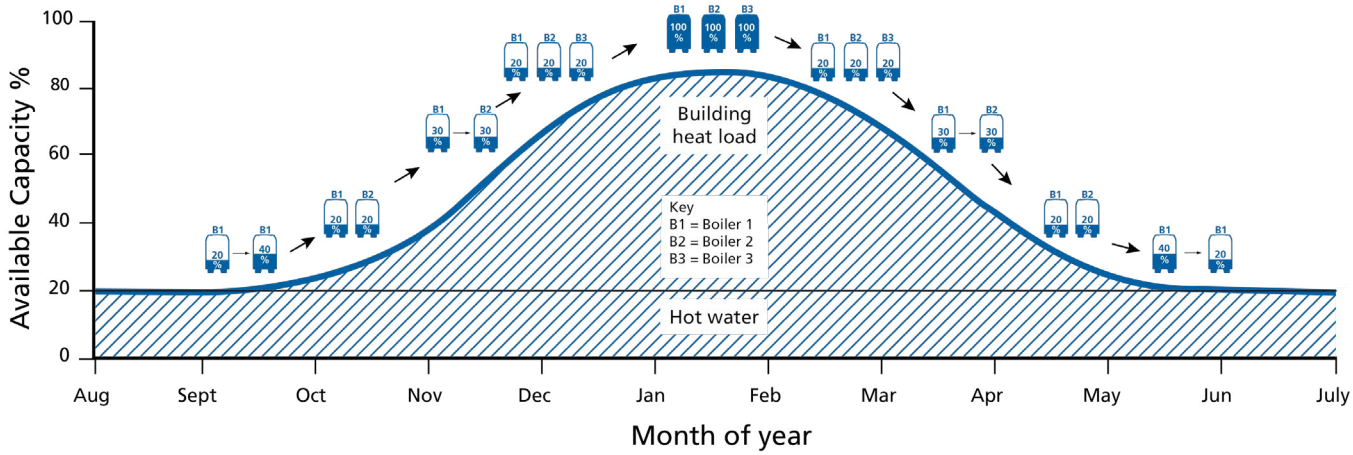

The overall efficiency of a multiple boiler plant depends on how close its total output can be controlled to match the load profile of the building. Therefore, it is a really important aspect of product selection.

Why match plant output to load?

Matching the building's heat load enables you to deliver the right amount of heat at the right time with little or no wastage. A commercial heating system is designed to match the peak load to heat a building up to full temperature within a short period of time. This requires a large load from the heat source; the boilers. However most of the time the boilers will be working at much lower loads. The trick is to match both, peak loads and low loads without oversizing the boiler and wasting energy. And to do this you need a system with a large turndown ratio.

Turning it down

Let's look at turndown ratios. Turndown ratio refers to the width of the operational range of the boiler, and is defined as the ratio of the maximum capacity to minimum capacity.

In a typical modular boiler system each module could have a turndown ratio of 5 to 1. So a cascade of 3 modules will have 15 to 1 turndown. This gives you a substantial range of outputs.

Varmax boiler - turndown

- A Varmax 450 has a 5:1 turndown – can deliver energy from 85kW to 439kW.

up to
5:1
Turndown

It's about how you drive it

Just like your car, a boiler needs to be driven correctly to achieve high operating efficiencies and close load matching. A good boiler sequence controller will help control the boilers in the most efficient way. The boiler has one built in, but for larger sites the Merley sequence controller can be used (see pages 16-20 for control options).

Saving fuel, money and the environment

Accurate load matching ensures you only use the fuel you need. This saves you money and reduces carbon emissions. And depending on the size of the project, these savings can be quite considerable.

Large vs small

But have you also considered the impact of replacing one large output single boiler with multiple smaller output modular boilers? The differences in gas use for the right application can be huge.

A large boiler will have to fully heat up regardless of how much heat is actually needed by the system. Whereas smaller modules can be setup to come on at low modulation, or only one module out of the system may need to fire up to meet the demand. Plus, smaller modules will get to temperature quicker than a large boiler due to a lower water content.

Boiler sequence control strategies

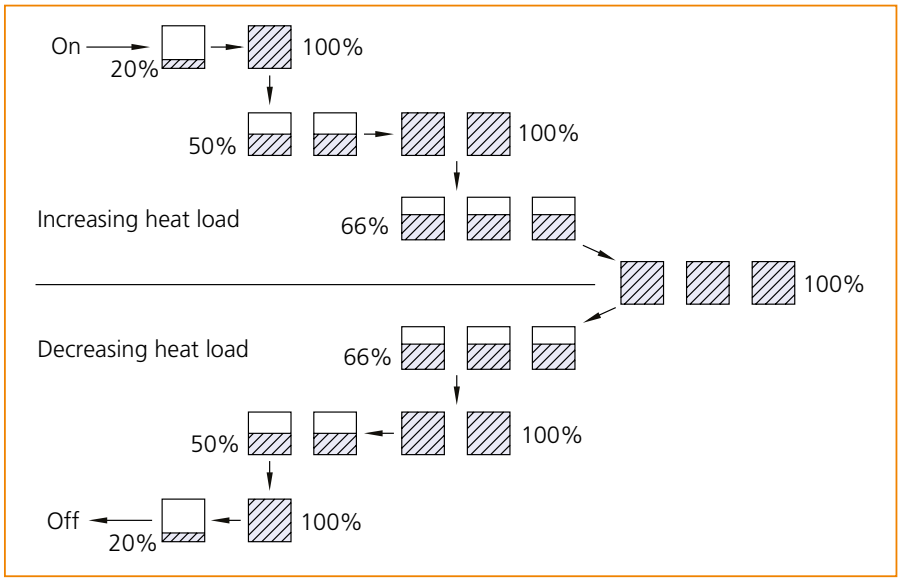

Cascade control

Steps a boiler module on at its lowest rate and then modulates it to its maximum rate before switching on the next boiler module. Maintains the lowest number of boiler modules in operation for a given heat load.

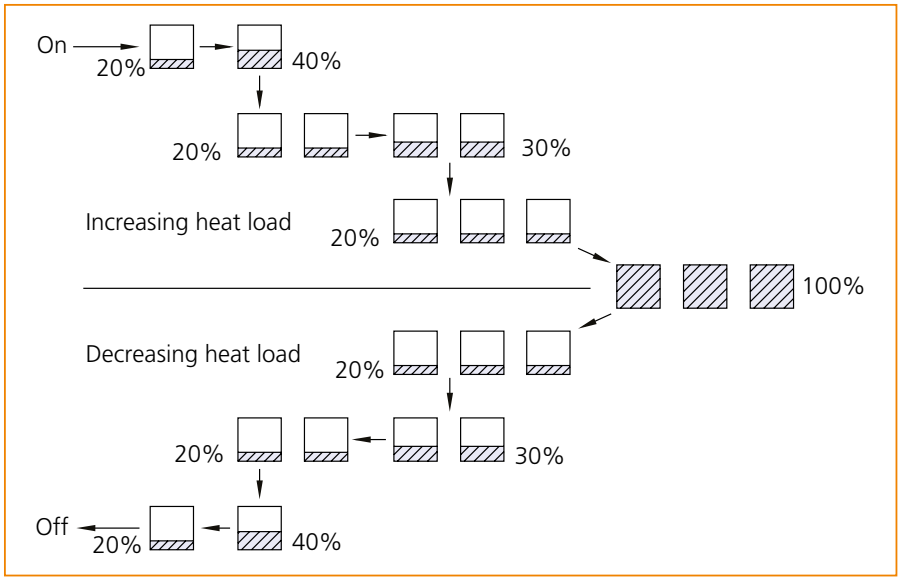

Unison control

Steps each boiler module on at its lowest rate until all boiler modules are firing and then modulates all boilers modules simultaneously to higher rates to match the system load. This method of sequencing can offer higher operating efficiencies, taking advantage of the higher part load efficiency of the boiler at lower firing rates.

Controls for single boilers

Single boilers may be used in a variety of situations, often smaller premises without sophisticated controls such as Building Management Systems. Varmax is perfectly suited to such installations having a control system that's expandable from very basic integral time clock control with fixed temperature operation all the way up to controlling multiple zone systems with full inside/outside temperature compensation and optimised time programming. Control functions available as standard (no optional extras):

- Time control with 3 programs per day
- Fixed flow temperature control
- Boiler shunt pump control (pump contactor required to suit electrical load of pump – not HHL supply)
- 5 minute over run for shunt pump
- Pump kick for shunt pump to help prevent seizure
- Frost protection based on water temperature, 5°C fixed set point

Optional heating circuit control kit

Up to 3 independent heating circuits incorporating mixing valves is possible with each circuit operating with a different flow and room temperature requirement to the other circuits. The boiler generates flow water to the highest zone temperature requirement whilst the other zones use mixing valve control to reduce flow temperature into their respective circuits. This allows heating to be maintained throughout any demand and domestic hot water requirement.

An optional heating circuit kit must be fitted to the boiler comprising a clip in controls module AGU2.550A109 which the circuit flow temperature sensor, mixing valve and pump are all wired to. Pumps must be connected via a suitably rated contactor – (not HHL supply).

Optional heating circuit control kits

Single heating circuit - Part number 563605692

Two heating circuits - Part number 563605693

Three heating circuits - Part number 563605694

Boiler capacity for optional clip in controls

Each boiler only has the capacity for three optional clip in control kits. If remote fault and run signalling using the optional volt free contact kit is required this will use up one of the optional clip in kit locations. In such instances only 2 optional heating circuit control kits may be fitted.

1. Navistem control interface (reversible fascia)
2. Navistem controller
3. Location for optional clip in kits or extension modules

Optional outside air temperature sensor - QAC34

It is always recommended to fit an outside air temperature sensor allowing enhanced frost protection for protection of both the building infrastructure and the boiler plant. The sensor should be located on a north facing wall. Control functions available with outside air temperature sensor fitted:

- **2 Stage frost protection** – based on water temperature and outside air temperature.
- **Stage 1** – Air temperature: starts circulation pumps to move heat around the circuit from within the building protecting the plantroom.
- **Stage 2** – Water temperature: starts the boiler to prevent water within the system freezing.
- **Summer shutdown** - Stops boiler operation when outside temperature reaches a predetermined set-point.
- **Adaptable weather compensation** - Matches boiler flow temperature to building thermal dynamics as outside air temperature fluctuates up and down.

Part number 533901457

Optional room temperature sensors

Each heating circuit can be equipped with an independent room temperature sensor. There are two types of room sensor, a fully **programmable room sensor QAA74**, and an **offset adjustable room sensor QAA55**. When a room temperature sensor is fitted enhanced control of the heating circuits can be achieved based on both internal and outside air temperatures. This could for instance compensate for an unexpected higher internal air temperature allowing the heating system to start later and at a lower flow temperature saving energy.

Remote interlock

Each boiler can be interlocked to prevent operation when external controls elements are in fault, such as gas solenoid valve closure. A programmable input on terminals H5 can be commissioned to shut down the boiler if the contacts go open circuit. External switches using this circuit must be volt free.

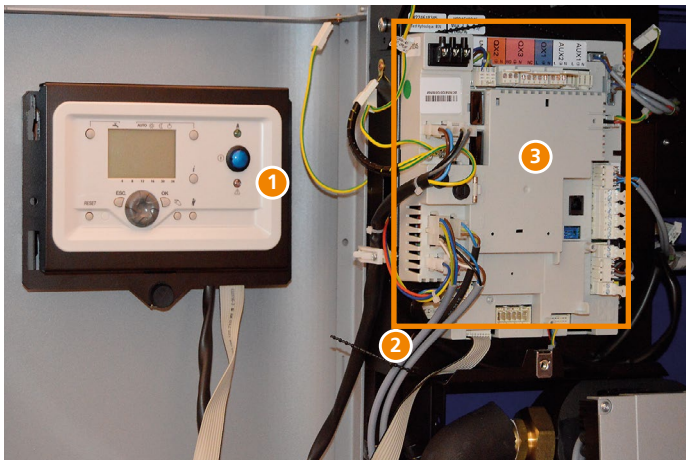

Optional programmable room sensor - QAA74

This communicates with the boiler and allows full adjustment of the room temperature, time clock, holiday periods and frost protection settings. The unit also displays fault codes from the boiler plant.

- 3 programmable periods per day
- Reduced temperature/night set back for non occupancy hours
- Holiday period (frost protection remains active)
- Indication of operating parameters and boiler fault condition
- 7 day time clock with automatic summer/winter clock adjustment

Part number 563605695

Optional offset adjustable room sensor - QAA55

For installations where limited control is required by the building occupants, the offset adjustable room sensor may be used. This permits adjustment +/- 3°C from the programmed room temperature set point and communicates room temperature to the boiler.

- Setting the operating mode between automatic operation, continuous operation comfort or night setback temperature, off with frost protection active
- Setting a temporary off condition during an un-programmed non occupancy period that will reset automatically according to following program settings
- Programmable lock to prevent tampering.

Part number 563605696

Optional domestic hot water control

A single domestic hot water cylinder (calorifier) may be controlled from the boiler. Energy loading of the cylinder is achieved by starting and stopping the pump to the cylinder coil. Internal temperature sensing for the stored domestic hot water is achieved by either fitting the cylinder with an optional domestic hot water kit (temperature sensor QAZ36 and pocket) or the boiler can be configured to receive a Normally Open/Normally Closed signal from a standard cylinder thermostat. The high limit thermostat for the cylinder must also be wired to ensure the boiler energy supply is isolated from the cylinder in the event of the high limit thermostat setting being reached.

Controls option	Part number
Outside air temperature sensor – QAC34	533901457
Domestic hot water sensor kit (sensor and pocket) - QAZ36	563605609
Volt free contact kit for remote status signalling – AGU2.55A109	563605666
Mixing valve heating circuit control kit (clip in module, temperature sensor and pocket) for 1 zone	563605692
Mixing valve heating circuit control kit (clip in module, temperature sensor and pocket) for 2 zones	563605693
Mixing valve heating circuit control kit (clip in module, temperature sensor and pocket) for 3 zones. Note: cannot be used in conjunction with volt free contact kit	563605694
Programmable room sensor QAA74	563605695
Offset adjustable room sensor QAA55	563605696

Remote start stop

Each boiler is equipped with a remote start stop circuit. On receiving a start signal from, for instance, an outside time clock the boiler will operate according to its internal temperature management program. This level of control simply overrides the boilers internal time clock program. The boiler may still be equipped with optional controls including an outside air temperature sensor, room temperature sensors and individual heating zone controls whilst controlling also domestic hot water cylinder using the control options detailed above.

BMS control

All Varmax boilers may be controlled with more sophisticated controls such as Building Management Systems (BMS) using the 0-10 volt analogue input which can be configured for temperature or load control. Where a BMS exists it is recommended that heating circuit and domestic hot water control is managed by this system.

For full details concerning control set up refer to Manual Navistem B3000 ref 500001310.

0-10 volt analogue temperature input chart

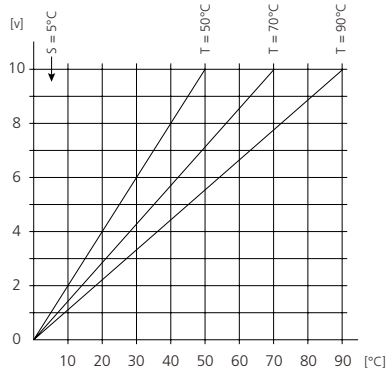

T = maximum value of heat demand
S = minimum limitation of heat demand = 5°C

Controls for multiple boilers

Multiple boilers are likely to be installed within larger buildings where the controls requirements can be expected to be more complex. Often larger buildings are equipped with Building Management Systems and where this is the case it is recommended to take advantage of the powerful control capability of these systems to not only manage the various heating circuits within the building but also to control the operation of the boilers.

Where Building Management Systems are not present, or independent control of the boilers is required there are two alternative options available from Hamworthy:

1. Sequencing of up to 15 additional boiler modules using integral Master/Slave feature of control.

2. Sequencing of up to 15 boiler modules using the Hamworthy Merley boiler sequence controller for mounting remote to the boiler or within clients own control panel.

Key features of both methods of control:

- Choice of control inputs including:
  - External enable signals
  - 0-10V analogue heat demand signal
  - Built-in time clock settings
- Choice of cascade or unison sequencing strategies
- Lead boiler rotation
- 7 Day integral time clock – 3 programmable periods per day
- Optimised start and stop based on outside and room air temperatures
- Holiday periods
- Frost protection
- Constant or variable flow temperature based on outside and room air temperatures
- 2 stage frost protection based on outside and room air temperature
  - Stage 1 – Air temperature: starts circulation pumps to move heat around the circuit from within the building protecting the plantroom
  - Stage 2 – Water temperature: starts the boiler to prevent water within the system freezing
- Summer shutdown
- Reduced temperature/night set back for non-occupancy hours
- Pump kick for connected pumps

Master/Slave boiler sequence controller

When using Master/Slave sequencing it is important to select which boiler module is going to be the Master. All site wiring associated with the sequence control function must be routed to this boiler and connected to the boiler controller. Programming of the sequence control will also be completed via the interface on this boiler module.

LPB bus communication kit - OCI345

Up to 16 boiler modules may be sequence controlled and communication between boiler modules is facilitated via an LPB bus. Each boiler module must be equipped with an optional LPB bus communications kit.

Part number 563605667

Outside air temperature sensor - QAC34

It is always recommended to fit an outside air temperature sensor allowing enhanced frost protection for protection of both the building infrastructure and the boiler plant. The sensor should be located on a north facing wall. Control functions available with outside air temperature sensor fitted:

- 2 Stage frost protection – based on water temperature and outside air temperature
  - Stage 1 – Air temperature: starts circulation pumps to move heat around the circuit from within the building protecting the plantroom
  - Stage 2 – Water temperature: starts the boiler to prevent water within the system freezing
- Summer shutdown to prevent boiler operation when outside temperature reaches a pre-determined set-point
- Adaptable weather compensation to match boiler flow temperature to building thermal dynamics as the outside air temperature fluctuates up and down.

Part number 533901457

Common flow temperature sensor - QAZ36

A flow temperature sensor must be located in the common primary flow leaving the boilers and before the low loss header. The sequence controller responds to signals from this sensor, comparing temperature set-point with actual flow temperature, then manages the number of boilers in operation and modulation rate of each boiler to achieve and maintain the desired flow temperature. A dedicated sensor kit including immersion pocket is available. The number of boiler modules released to fire is selected according to the programmed sequence control strategy.

Part number 563605673

Controls for multiple boilers

Time control

A 7 day time clock with 3 adjustable time periods per day is a standard feature of the sequence controller.

Optimised start and stop

The optimiser uses a combination of the actual room temperature and outside air temperature to calculate the exact time at which the heating will be started or stopped to ensure comfort levels at the correct occupancy times. A self-learning function monitors discrepancies in room temperatures at the pre-defined times allowing the optimiser to fine tune to the building thermal performance.

Manual over-ride

Continuous on or off operation can be set during which the time program is overridden until the over-ride function is manually de-activated. Frost protection and summer shutdown controls remain active.

Remote enable

Continuous on or off operation can be set during which the time program is overridden until the over-ride function is manually de-activated. Frost protection and summer shutdown controls remain active.

Summer shutdown

Whenever the outside air temperature exceeds the adjustable programmed setting the heating is turned off.

Using BMS 0-10 volt signals

The sequence controller can be configured to accept a BMS analogue input to initiate heat generation. NOTE: When using a BMS to initiate cascade control via a 0-10 volt analogue signal, the internal time clock and remote enable circuit functions are disabled.

Input signals to the sequence controller must be temperature configured. The input signal is translated to a temperature set point for the flow temperature, and translation is according to a linear graph from 5°C to an upper limit set during commissioning. 10 Volts corresponds with the upper limit with a maximum 85°C setting.

Optional controls kits for multiple boilers

Controls options	Part number
Outside air temperature sensor QAC34	533901457
Volt free contact kit for remote status signalling AGU2.550A109	563605666
Heating circuit sensor kit (sensor & pocket) QAZ36	563605673
Merley boiler sequence controller, wall mounted	563605672
Merley boiler sequence controller, loose kit for panel mounting	563605671
LPB Bus communications module OCI345, one required per boiler module	563605667
Programmable room sensor QAA74	563605695

Navistem (Siemens LMS) control panel.

Additional controls - electrical connections

Domestic hot water control

A single calorifier can be controlled from the boiler. The temperature control can be set to use a standard on/off type thermostat often supplied with a calorifier, or to use a resistance temperature sensor available as an option. Using a temperature sensor in place of a standard thermostat allows the boiler to read the actual hot water temperature providing additional functionality such as optimised start and stop and frost protection.

Temperature control is managed by starting and stopping the calorifier primary pump, connection to boiler terminals QX2.

Temperature sensing using either the manufacturer's thermostat or optional temperature sensor kit is connected to boiler terminals B3.

Optional DHW temperature sensor kit part number 563605674

Heating circuit control – direct heating circuit

A single direct heating circuit can be controlled from the boiler. This circuit can be set for either constant temperature or compensated temperature operation.

Control of flow to the heating circuit is managed by starting or stopping the heating circuit pump for connection to boiler terminals QX2.

If compensated flow temperature is required an external air temperature sensor must be installed and the boiler will optimise the flow temperature accordingly.

Note: If using a DHW calorifier a direct heating circuit cannot be connected. In this situation heating circuits must be connect using the optional heating circuit control kit.

Optional heating circuit control kit – AVS75

Where the boiler is controlling DHW, or multiple heating circuit control is required with the possibility to operate each heating circuit at a different flow temperature an optional heating circuit control kit must be used for each heating circuit.

Note: Varmax boilers can accommodate up to 3 optional heating circuit control kits.

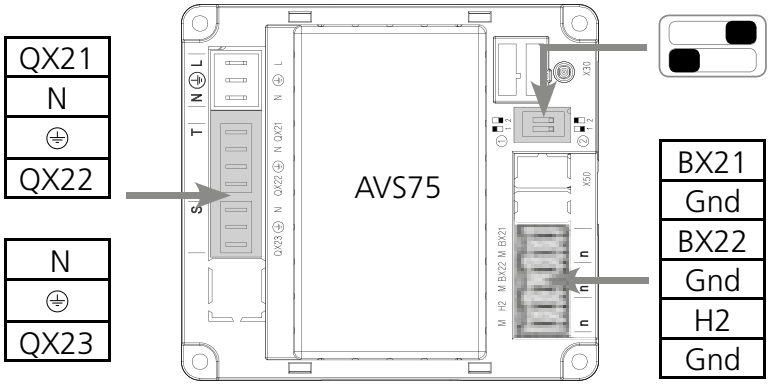

The heating circuit control kit has the ability to manage control of the heating circuit pump, mixing valve and receive a feedback signal from a flow temperature sensor within the circuit.

Each heating circuit can be set for constant temperature or compensated temperature control with each circuit able to operate at a different flow temperature to the others.

Wiring terminations for optional heating circuit control kit. This diagram applies to each heating circuit control kit used.

Terminal reference	Function	Electrical	Max load
QX21	Power supply for mixing valve – drive open	230v 50Hz 1Ph	1 Amp
QX22	Power supply to mixing valve – drive closed	230v 50Hz 1Ph	1 Amp
QX23	Power supply to heating circuit pump	230v 50Hz 1Ph	1 Amp
BX21	Input for heating circuit flow temperature sensor	Resistance input	
BX22	Not used		
H2	Not used		

Note: The optional heating circuit kits are supplied *with the following items:*

- Siemens AVS75 controller
- Siemens temperature sensor
- Power supply wiring loom to boiler controller
- Communications wiring loom to boiler controller

Flue systems

B23p pressurised open flues should comprise a dedicated flue pipe for removing the flue gases to outside. Combustion air is drawn into the boiler directly through the air inlet connection on the rear face of the boiler. The air filter supplied with the boiler must be fitted to the air inlet connection.

Single boiler

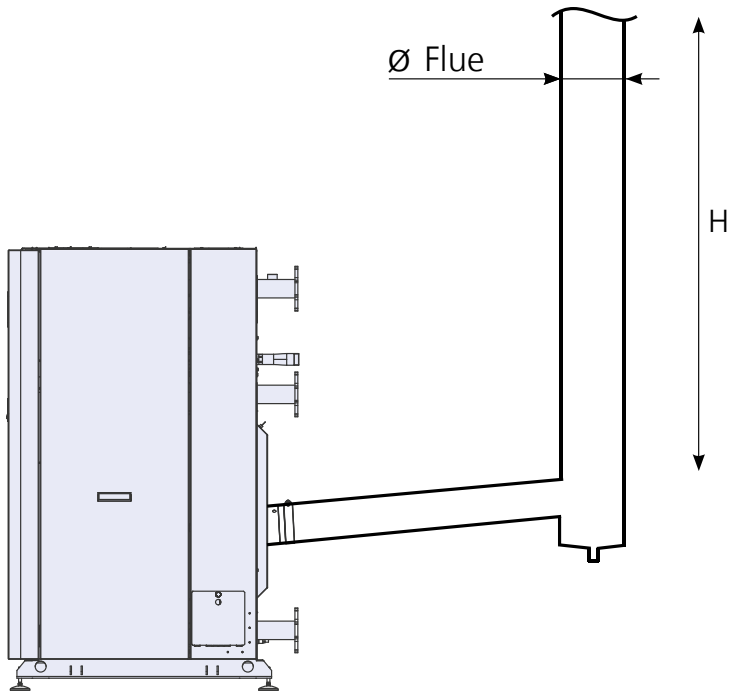

Flue Data Varmax (Combustion at 15°C and 1013mbar)											
Description	**Unit**	**120**	**140**	**180**	**225**	**275**	**320**	**390**	**450**	**525**	**600**
Flue Suitability		B23P	B23P	B23P	B23P	B23P	B23P	B23P	B23P	B23P	B23P
Flue Gas Mass flow rate,8.8 - 9.2% CO_2 (Q_n)@ 80/60	kg/h	190.08	220.68	289.44	358.2	410.04	479.52	608.4	722.52	835.56	944.64
Flue Gas Mass flow rate,8.8 - 9.2% CO_2 (Q_n)@ 50/30	kg/h	176.76	207.36	273.24	334.8	391.32	454.68	574.56	687.6	821.16	920.16
Flue Gas Mass flow rate,8.3 - 8.7% CO_2 (Q_{min})@ 80/60	kg/h	46.8	47.16	74.88	75.96	96.84	104.76	141.12	128.16	199.8	199.8
Flue Gas Mass flow rate,8.3 - 8.7% CO_2 (Q_{min})@ 50/30	kg/h	44.28	43.92	70.2	70.2	97.56	97.56	132.12	119.88	200.88	200.88
Approx flue gas temperature @ 80/60˚C	˚C	61	62	61	62	62	63	63	65	64	67
Approx flue gas temperature @ 50/30˚C	˚C	26	38	34	37	36	36	37	42	48	48
Max pressure at boiler flue outlet B23p @ 80/60˚C	Pa	166	164	92	128	97	145	155	173	183	164
Min pressure at boiler flue outlet B23p	Pa	5	5	5	5	5	5	5	5	5	5
NO_X class		6	6	6	6	6	6	6	6	6	6
NO_X Rating, Dry air free	mg/kWh	30	30	30	30	40	40	40	40	55	55

Type C13 & C33 room sealed flue systems

C13 and C33 room sealed flues include a twin pipe air and flue system that converges together into a single concentric flue terminal 160/250mm dia.

The flue terminal kit includes the concentric flue terminal, an adaptor to combine the twin air and flue ducts from the appliance into a concentric connection for the terminal and another adaptor for increasing the flue outlet connection on the boiler from 150mm to 160mm.

The twin pipe system components can be selected to suit the route for the air supply and flue discharge between the boiler and the terminal with the maximum distances for the air pipe and flue pipe provided in the tables below.

Flue components are CE certified EN14471 T120 H1. Flue pressure H1 up to 5000 Pa, and flue temperature T120 up to 120°C.

Flue pipe components are manufactured in polypropylene whilst air supply pipe components are manufactured in stainless steel.

C13 Room sealed flue – horizontal termination

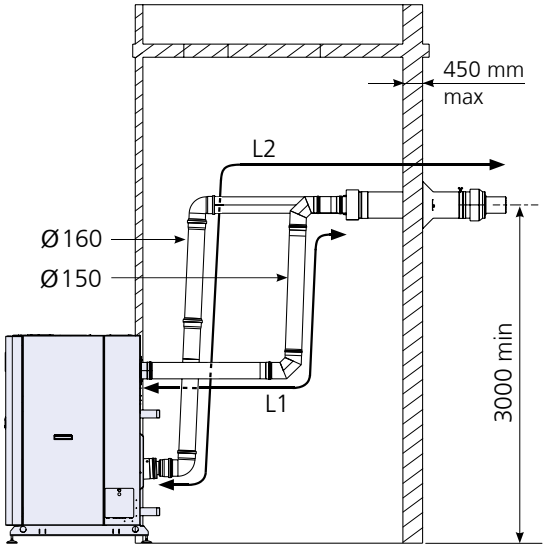

C33 Room sealed flue – vertical termination

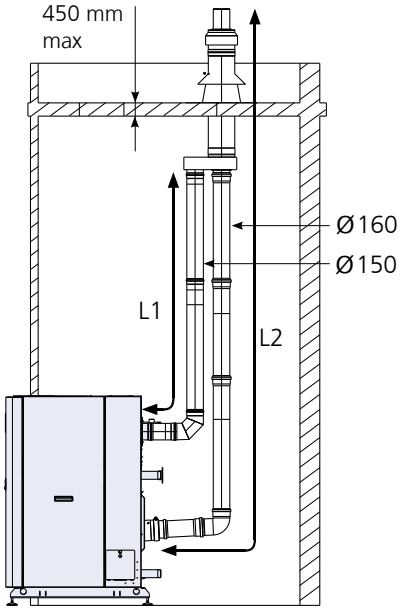

C13 and C33 room sealed flue performance data for Varmax boilers				
Model	**120**	**140**	**180**	**225**
Maximum air length L1 (m) 150mm dia.	16.5	16.5	13.5	13.5
Maximum flue length L2 (m) 160mm dia.	17.5	17.5	14.5	14.5
Equivalent length 90° elbow (m)	1.5	1.5	1.5	1.5
Equivalent length 45° elbow (m)	0.8	0.8	0.8	0.8

C13 and C33 flue components boiler models 120, 140, 180, 225		
Item	Material	Part number
C33 Flue terminal kit including: concentric terminal 160/250mm dia. with wall plates. Twin pipe to concentric adaptor boiler flue adaptor 150mm to 160mm dia.		41421
Flue pipe 160mm dia.1000mm long	Polypropylene	41425
Flue elbow 90° 160mm dia.	Polypropylene	41426
Flue elbow 45° 160mm dia.	Polypropylene	41427
Wall bracket 160mm dia.	Polypropylene	573407328
Air pipe 150mm dia. 1000mm long	Stainless steel	41428
Air pipe 150mm dia. 500mm long	Stainless steel	41429
Air elbow 90° 150mm dia.	Stainless steel	41430
Air elbow 45° 150mm dia.	Stainless steel	41431
Wall bracket 150mm dia.	Stainless steel	532511033

Type C53 room sealed flue systems

C53 room sealed flues consist of a twin pipe system with separate pipes carrying independently the combustion air and flue gases to and from outside.

Flue components are CE certified EN14471 T120 H1. Flue pressure H1 up to 5000 Pa, and flue temperature T120 up to 120°C.

Flue components other than terminals are only suitable for installation inside the building.

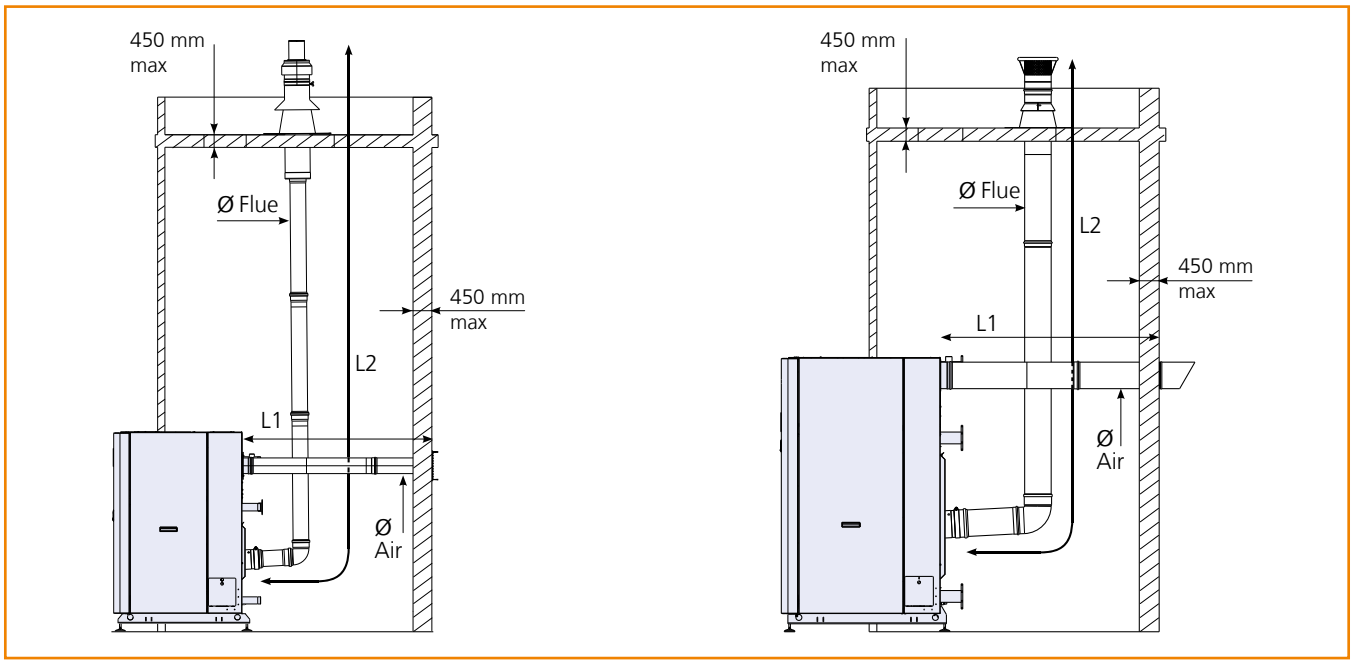

C53 Room sealed flue performance data for Varmax boilers						
Model	120 & 140	180 & 225	275 & 320	390 & 450	525	600
Maximum air length L1 (m)	10	8	10	10	10	6
Maximum flue length L2 (m)	40	39	40	40	25	6
Equivalent length 90° elbow (m)	1.5	1.5	2	2	2	2
Equivalent length 45° elbow (m)	0.8	0.8	1.1	1.1	1.1	1.1

Note: 120 to 225 models use concentric flue terminal which flue connects to inner tube – 160 dia. and outer air annulus is not used. Roof flashing must suit 200 dia. flue.

C53 twin duct	Boiler models 120, 140, 180, 225		Boiler models 275, 320		Boiler models 390, 450, 525 & 600	
Item	Dia.	Part number	Dia.	Part number	Dia.	Part number
Flue terminal kit including air inlet and flue terminals	160 Flue 150 Air	41422	180 Flue 180 Air	41423	200 Flue 180 Air	41424
Flue pipe 1000mm long	160	41425	180	41433	200	41438
Flue pipe 500mm long	160		180	41434	200	41439
Flue elbow 90°	160	41426	180	41436	200	41441
Flue elbow 45°	160	41427	180	41437	200	41442
Pitched roof flashing	200		180	*	200	*
Flat roof flashing	200		180	41451	200	41455
Wall bracket	160	573407328	180		200	
Air pipe 1000mm long	150	41428	180	41433	180	41433
Air pipe 500mm long	150	41429	180	41434	180	41434
Air elbow 90°	150	41430	180	41436	180	41436
Air elbow 45°	150	41431	180	41437	180	41437

* Various part numbers, depends on angle.

Application and water system

Water systems

Varmax boilers are suitable for **sealed pressurised systems only**. For safe operation (formerly a requirement of the Health and Safety Document PM5; now withdrawn) Hamworthy recommends sealed systems to have a fuel supply cut off in the event of low and high-pressure conditions.

Hamworthy also recommend for sealed systems to use a Chesil pressurisation unit with correctly sized Burstock expansion vessels (see page 28 for details of these products).

It is advisable to thoroughly flush both new as well as existing systems to remove loose debris before connecting the new boilers. For badly contaminated systems it may be necessary to use a proprietary system cleaner to remove stubborn deposits. Once flushing and cleaning is complete suitable corrosion inhibitors should be added to the system and their concentration levels maintained throughout the life of the boiler installation.

The primary circuit should be fitted with a suitable strainer in the common return pipe to the boilers to filter out water born debris. Cleaning strainers should be part of a regular site maintenance schedule. Additional use of a Clenston dirt and air separator in the primary circuit will help filter out smaller suspended particles as well as micro air bubbles. Reducing air in the system is a major contributor to protection against corrosion, noise and inefficiency.

System feed water quality

If boiler feed water has a high degree of hardness (>180mg $CaCO_3$/litre) it is strongly recommended that the water be treated to prevent the build-up of sludge and scale. Any make up water introduced to the system will dilute water treatment. It is therefore recommended to fit a water meter in the make-up water supply to monitor the volume of water entering the system so that appropriate action can be taken regarding the maintenance of corrosion inhibitor concentration. Metering the make-up water supply will also assist in identifying system leaks which might otherwise go unnoticed, e.g. underground pipe ruptures. For further guidance, please refer to ICOM'S 'Water treatment and conditioning of commercial heating systems' document.

Location

The location chosen for the boiler must permit the provision of a satisfactory flue system and an adequate air supply. Adequate space should be allowed for installation, servicing and air circulation around each unit. This includes any electrical trunking laid along the floor and to the appliance. Refer to dimensional drawings on pages 5 & 6 for more details on clearances. Any combustible material adjacent to the boiler and the flue system must be so placed or shielded to ensure that its temperature does not exceed 65°C. Further details regarding boiler location are given in BS 6644. Varmax boilers should be positioned on a level non-combustible surface that is capable of supporting the boiler weight when filled with water, plus any ancillary equipment.

Gas supply pipes

Supply pipes must be fitted in accordance with BS 6891 or IGE/UP/2 as appropriate. Pipework must be of adequate diameter for the length of run, and must not be of a smaller diameter than the boiler's gas connections. For gas pipe sizing calculations refer to Chartered Institute of Building Services Engineers (CIBSE) Guide C. The complete installations must be purged and tested for soundness as described in BS 6891 or IGE/UP/1 and IGE/UP/1A as appropriate.

Condensate discharge & ventilation

Condensate discharge

Natural gas boilers typically produce condensate at a rate of 13 litres per hour per 100kW input energy when operating in condensing mode. Although the condensate produced is mildly acidic (typical pH~3.5), normally it can be disposed of through the drainage system. If in any doubt about local regulations, check with the local water authority.

The Varmax boilers are equipped with a syphon trap to allow condensate to flow safely but prevents the escape of flue gases via the drain.

The condense discharge pipe should have a minimum fall of 2.5° to drain, and should discharge via tundish arrangement. To prevent any risk of freezing in winter, the condense pipe should be insulated and/or routed internal to the building where possible.

General ventilation requirements

An adequate supply of fresh air for combustion and ventilation must be provided in accordance with BS 6644 for boiler installations greater than 70kW nett rated input.

Boiler house temperatures

Additional requirement of BS 6644 for multiple boiler installations requires that the air supplied for boiler house ventilation shall be such that the maximum temperatures within the boiler house do not exceed:

- At floor level, 25°C (or 100mm above floor level)
- At mid-level, 32°C (1.5m above floor level)
- At ceiling height, 40°C (or 100mm below ceiling height)

Ventilation grille openings

High and low level ventilation grilles shall be positioned as high and as low as practicably possible. Low level grills will be located within 1metre of floor level for Natural Gas. High level grilles are recommended to be positioned within 15% of the boiler room height from the ceiling. High and low ventilation grilles shall communicate with the same room or internal space where compartment ventilation is used. Where ventilation grilles communicate directly with outside air they shall be positioned on the same wall.

Air supply

The air supply should be free from contamination such as building dust and insulation fibres from lagging. To avoid unnecessary cleaning and servicing of the boiler modules, the boilers should not be fired whilst building work is being undertaken. Where a boiler installation is to operate throughout the summer months, e.g. for domestic hot water production for more than 50% of the time, then additional ventilation allowances are required. Refer to BS 6644 for more information.

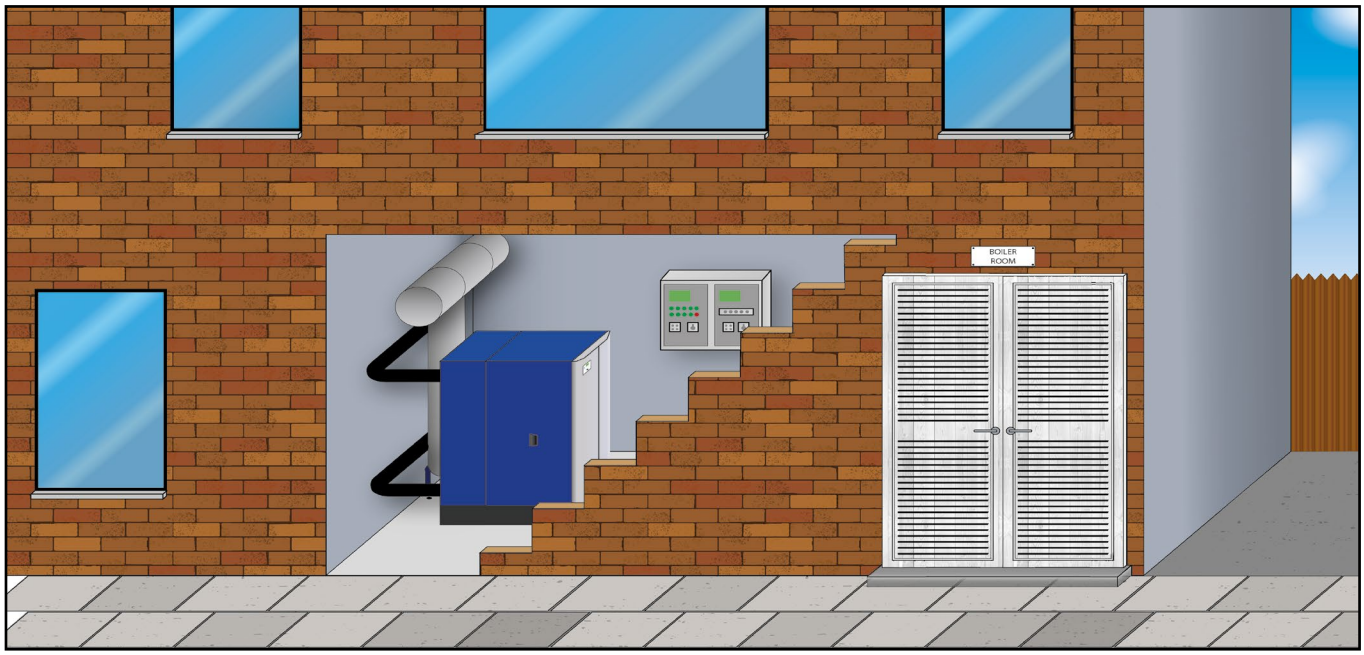

Typical boiler house ventilation.

Varmax hydraulic schemes

Scheme 1: *Single boiler with split temperature heating and domestic hot water circuit*

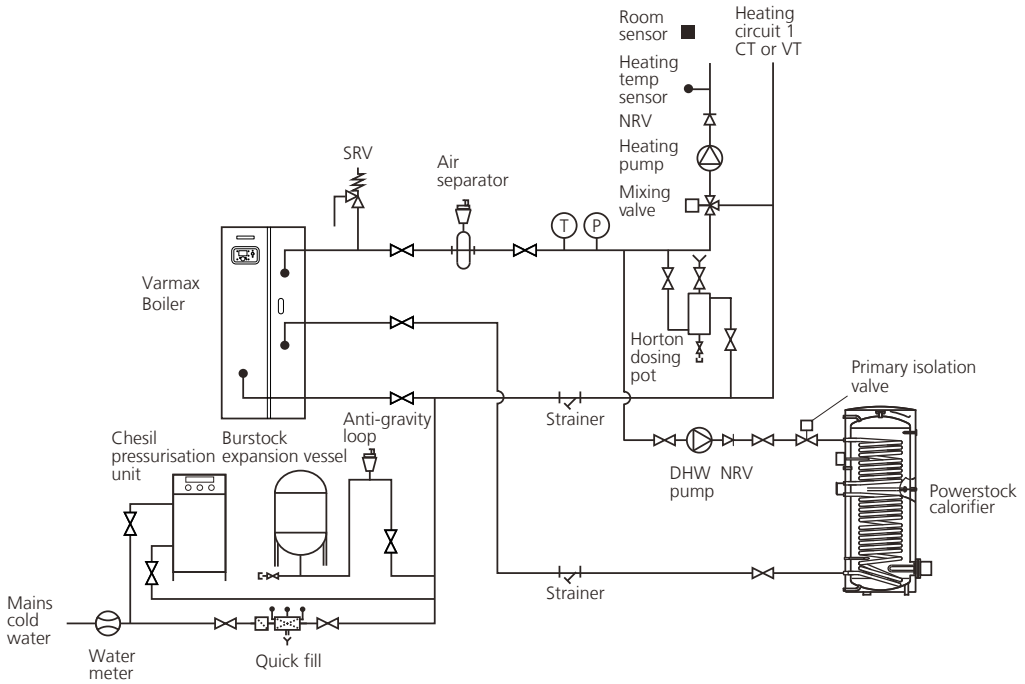

Scheme 2: *Single boiler with multiple split temperature heating circuits and domestic hot water*

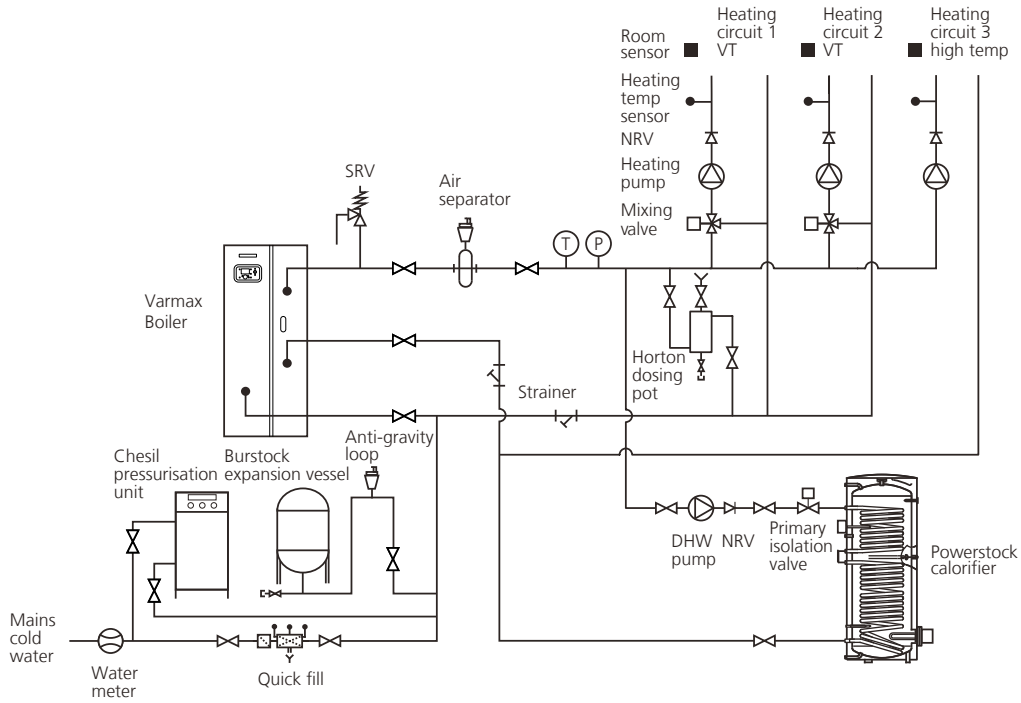

Note: These schematics have been provided for reference only.

Varmax hydraulic schemes

Scheme 3: *Multiple boilers with multiple split temperature heating circuits and domestic hot water circuit*

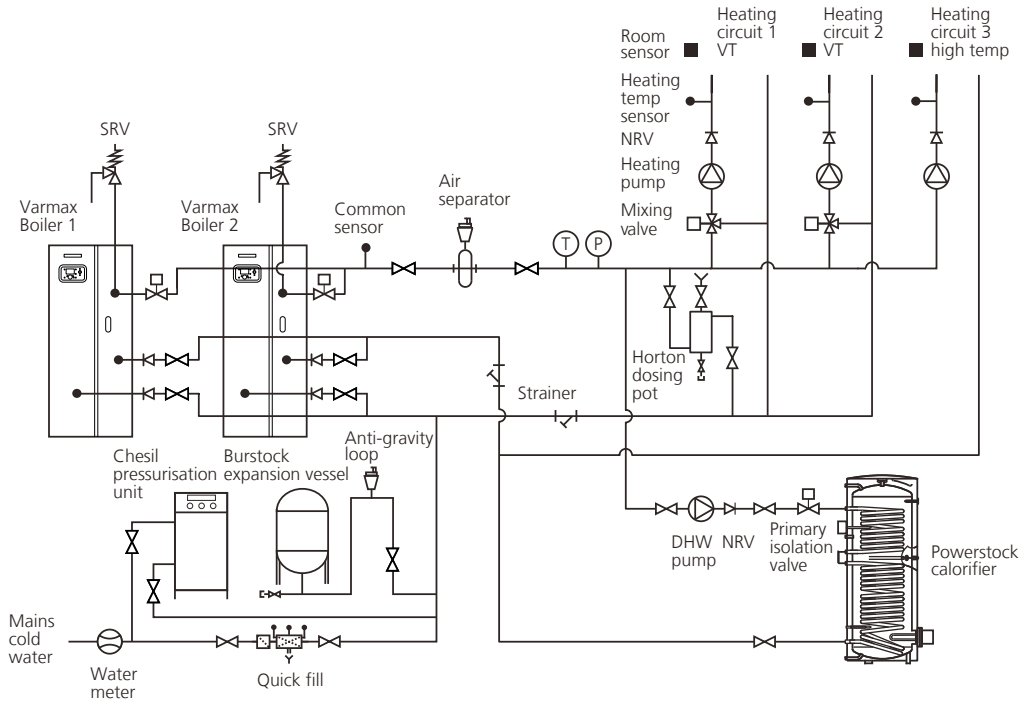

Scheme 4: *Multiple boilers with low loss header*

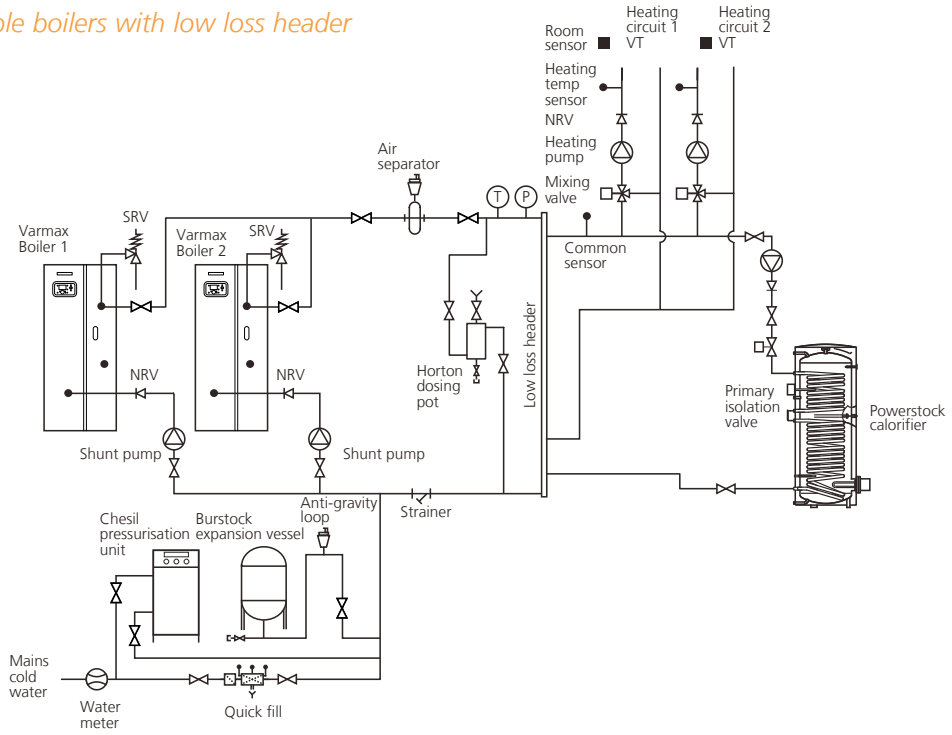

Services and warranty

Commissioning

We strongly recommend that all boilers are commissioned by our service department, and some specifications state that it must be carried out by the manufacturer. As well as ensuring your product is set up correctly for maximum efficiencies you will receive extra benefits on warranty (see below). On completion, you will get a report with details of the initial operating settings.

Service

The Varmax boiler has been designed with ease of service in mind. With wide opening doors and easy to remove side panels provide good access to the boiler for service and maintenance. An air inlet filter for clean combustion air and fast assessment of maintenance requirement is fitted to all Varmax boilers.

To maintain your boilers, we have a range of servicing options that can be tailored to your requirements. For more information on commissioning and service please contact Hamworthy Heating service department.

Warranty

The Varmax boiler comes with a 5-year warranty on the heat exchanger. All other parts carry Hamworthy's standard two years' warranty (except for consumables in line with our Terms and Conditions). Where the product is commissioned by Hamworthy service engineers within 6 months of delivery date, then the two-year warranty covers parts and labour from date of commissioning. We offer tailored packages to suit individual customer requirements, many of which include extended warranty benefits. Full details of warranty terms and conditions are available on request.

5 Yr Heat Exchanger Warranty

Service

Tel: **01202 662555**

Email: **service@hamworthy-heating.com**

Spares

Tel: **01202 662525** Fax: **01202 662551**

Email: **spares@hamworthy-heating.com**

Spares

Essential to any maintenance and service regime is the availability of quality spare parts.

By coming to us, the Original Equipment Manufacturer (OEM), you can be assured of genuine spare parts and may also benefit from technological improvements. We have a long-term commitment to spare parts for our products.

Delivery

Varmax boilers are supplied within a unique pallet that incorporates skids to aid moving the boiler. With the boiler securely fixed to the delivery pallet the assembly can be simply turned onto its skids which aid pulling/pushing the boiler into location.

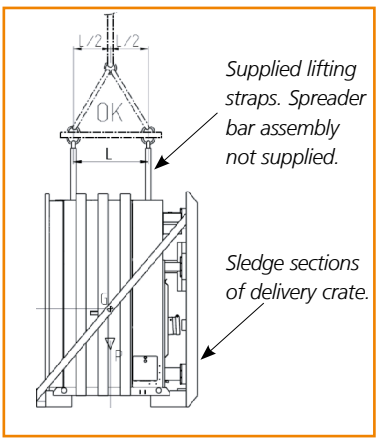

Every boiler is supplied with lifting eyes on top of the heat exchanger to which straps are factory fitted and correctly located for crane lifts to elevated boiler house locations. A suitable spreader bar must be used when lifting the boiler using the supplies straps to protect the casings and components on top of the boiler.

Standard delivery for all Hamworthy products is free of charge.

Boilers are delivered to ground level and are closely co-ordinated with the customer, to suit the site construction programme.

To enquire about special delivery services including FORS and time critical deliveries (additional charges apply) please contact our customer services team.

Complete your system

As well as energy efficient commercial boilers, we supply direct and indirect fired water heaters plus equipment to enhance the efficiency and longevity of your heating system.

From dosing pots and air & dirt separators for system cleanliness to pressurisation units and expansions vessels for sealed systems, Hamworthy can offer the support equipment needed for your system installation.

Burstock expansion vessel

Chesil pressurisation units

System equipment

Chesil pressurisation unit

Wall hung and floor standing pressurisation units for sealed systems. Available in 5 models with single and twin pump options.

Burstock expansion vessel

Floor standing expansions vessels for use with sealed heating and hot water systems. Available in 10 models from 25 to 1000 litres.

Clenston air and dirt separator

For the removal of dissolved gas and air particles from heating systems. Available in 7 models to suit pipe sizes from DN50 to DN200.

Horton dosing pots

Chemical dosing pots for introducing chemicals into a sealed heating system. Available in 4 models from 3.5 to 15 litres capacity.

Hot water

Powerstock calorifiers and storage tanks

Glass lined calorifier for indirect domestic hot water production with single and twin coil options. Available in 7 models with continuous outputs from 569 to 1,858 litres per hour.

Glass lined storage tanks for domestic hot water available in 4 models with storage capacities of 300 to 990 litres.

Halstock calorifiers and storage tanks

Stainless steel calorifiers for domestic hot water production with single and twin coil options. Available in 5 models with continuous outputs from 300 to 2106 litres per hour. Stainless steel storage tanks for domestic hot water available in 5 models with storage capacities of 300 to 965 litres.

Dorchester direct fired water heaters

5 ranges of condensing and non-condensing direct fired water heaters with glass lined and stainless steel options to choose from. Available in over 22 models with continuous outputs from 228 to 2,400 litres per hour.

Trigon solar thermal system

A complete solar hot water system including solar collectors, transfer stations, and controller.

Want to improve your industry knowledge?

We're accredited with CIBSE to deliver approved Continuing Professional Development (CPD) courses.

It's our opportunity to share our knowledge with you. More than 3,000 people have attended our CPD seminars and 95% rated them as good or excellent.

Hamworthy CPD seminars are free to attend and our flexible approach means that we are able to tailor our training to suit your business. Lots of our customers choose to run these online at lunchtime or at their own premises so that there is minimal disruption to the working day.

"Very good session with lots of very detailed and relevant information. Would highly recommend!"

CIBSE CPD

Book a free CIBSE-accredited CPD seminar for you and your colleagues today:
hamworthy-heating.com/cpd

CPD courses available:

- **Controls - unwiring the jargon**
- **New Boilers on Old Heating Systems: Hydraulic Design - A Story of Separation**
- **Best Practice Heating & Hot Water Plant Refurbishment**
- **Energy Saving in Commercial Heating and Hot Water - Could you save a £million?**
- **Best Practice in Domestic Hot Water (DHW) - 3 modules**

Product Training

Get hands-on training with Hamworthy's commercial boilers.

We can provide training onsite, online, or you can attend a course at one of our training centres. Delivered by Groupe Atlantic engineers with years of product knowledge and industry experience. By attending our training you'll be more confident in running our equipment.

The course will guide you through the servicing and fault finding of Hamworthy products to ensure they are operating at their maximum efficiencies.

Hamworthy's training centres are conveniently located across the UK.

Each training centre has live firing boilers as well as a display of boilers, water heaters and additional system equipment.

See the latest training dates and book your place online:
hamworthy-heating.com/training

Training courses available:

- **Purewell Variheat mk2 boiler**
- **Stratton mk2 wall hung boiler**
- **Wessex ModuMax mk3 boiler**
- **Upton boiler**

About Hamworthy

Hamworthy Heating is a leading British commercial boiler manufacturer. Our energy efficient heating, hot water and renewable solutions are used in buildings across the UK.

The Hamworthy difference

British engineering excellence

Here in the UK, we design, test, manufacture and source market-leading products. We know our products inside out, back to front and from start to finish. You can trust that we know what we're talking about.

Lifetime support

From design and specification, through to commissioning, training and maintenance, as well as commitment to spares availability. We provide long term support for businesses with their commercial heating and hot water needs.

People first

It's not just our products that set us apart, it's our people. Truly excellent customer service, great technical knowledge and being easy to deal with.

That's the Hamworthy difference.

Everyone's got history, we've got heritage

Our roots date back to 1914 when two brothers in Poole set up Hamworthy Engineering. Decades of experience go in to every nut, screw and bolt. Every phone call, text and email. Since 2008, we've been part of Groupe Atlantic, a company with a similar ethos to us. Groupe Atlantic was founded in 1968 by two engineers and is now one of the market leaders in the European heating and hot water industry. We're now part of their growing UK, ROI and North America Divisions.

Our associations

We are an active member of trade associations and professional bodies supporting the industries we work in.

Our accreditations

International Organisation for Standardisation (ISO) is the world's largest developer of voluntary International Standards. We are proud to have been awarded the following ISO accreditations:

- ISO 9001 Quality Management System
- ISO 14001 Environmental Management System
- ISO 45001 Health and Safety Management System

When you deal with Hamworthy, have confidence that we're working within a defined set of standards that is internationally recognised.

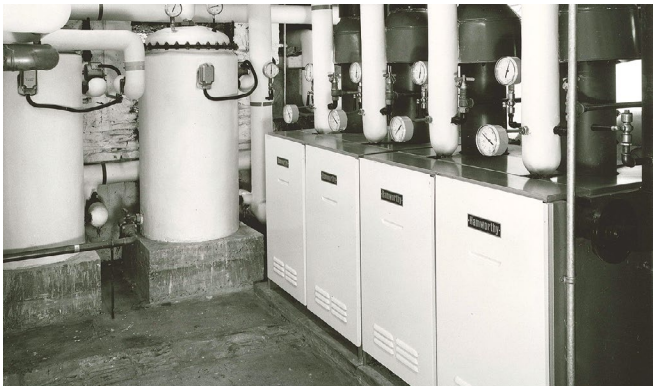

Book a free site survey

hamworthy-heating.com/site-survey

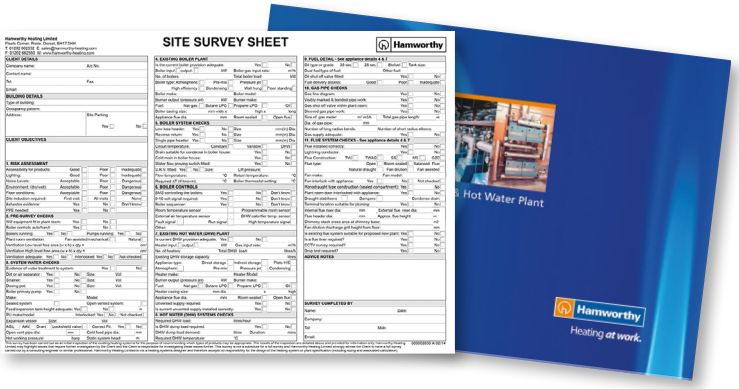

View our full CPD and product training offer

hamworthy-heating.com/cpd
hamworthy-heating.com/training

Download product literature and drawings

hamworthy-heating.com/technical-library

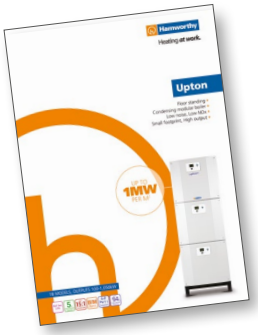

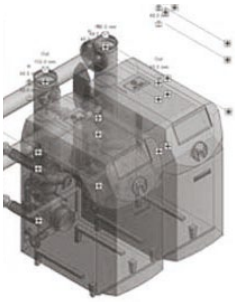

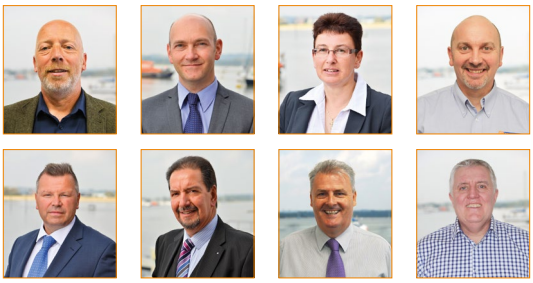

Find out who your local contact is

hamworthy-heating.com/find-your-local-sales-manager

Get information for discontinued products

hamworthy-heating.com/discontinued-products

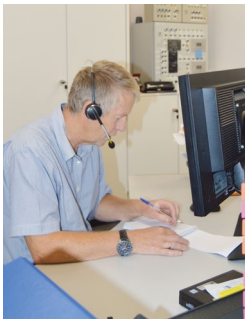

Contact our in-house technical support team on

01202 662505

Your local contact is:

British engineering excellence from Hamworthy Heating; the commercial heating and hot water specialists.

Hamworthy Heating Limited
Wessex House,
New Fields Business Park,
Stinsford Road,
Poole, Dorset BH17 0NF

01202 662500
sales@hamworthy-heating.com
hamworthy-heating.com

SUPPORT BRITISH MANUFACTURING

Hamworthy Heating Accreditations
ISO 9001 Quality Management System
ISO 14001 Environmental Management System
ISO 45001 Health & Safety Management System

The printed version of this brochure is produced using environmentally friendly print solutions in partnership with our suppliers.

Every effort has been taken to ensure the details in this guide are accurate. Hamworthy Heating does not, however, guarantee the accuracy or completeness of any information nor does it accept liability for any errors or omissions in the information.

Hamworthy Heating reserves the right to make changes and improvements which may necessitate alteration to product specification without prior notice.

500002676 J