itransport PLANNING

Member of iPRT Group of Companies

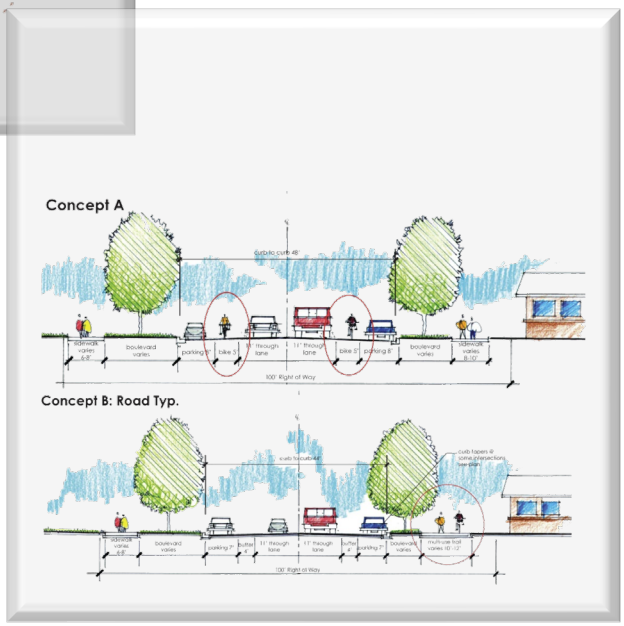

itechnical references

Creative Minds, *Intelligent Thinking*

Ref.1 MfS & MfS 2 3

Ref.2 Visibility Splays 4

Ref.3 Pedestrian Visibility Splays 7

Ref.4 Acceptable Walking Distances – Public Transport 7

Ref.5 Acceptable Walking Distances - Walking 9

Ref.6 Acceptable Walking Distances - Cycling 10

Ref.7 Form of Access 13

Ref.8 TRICS 14

Ref.9 DfT and HE Guidance on Development Impact 15

Ref.10 Environmental Impact 16

Ref.11 Car Parking – NPPF 16

Ref.12 Setting of Local Speed Limits 17

Ref.13 Construction Traffic Guidance 17

Ref.14 Swept Path Analysis 22

Ref. 15 Centreline Radii & Widening on Bends (informal generic advice, always consult the LHA standards) 23

Ref.16 Welcome Pack Links 24

Ref.17 *PICs* Analysis Criteria 25

Ref.18 Complementary Uses 26

Ref.19 Food Store Pass-by, Linked Trip and Trip Transfer Relationships 27

Copyright – All Rights Reserved

iPRT © Group Ltd (iPRT) and all its subsidiary companies disclaim any responsibility to the Client and others in respect of any matters outside the scope of this report. This report has been prepared with reasonable skill, care and diligence within the terms of the Contract with the Client and generally in accordance iPRT's Terms and Conditions and taking account of the manpower, resources, investigations and testing devoted to it by agreement with the Client. This report is confidential to the Client and iPRT accepts no responsibility of whatsoever nature to third parties to whom this report or any part thereof is made known. Any such party relies upon the report at their own risk.

Unless explicitly stated otherwise, all rights including those in copyright in the content of this document are owned by or controlled for these purposes by iPRT.

Except as otherwise expressly permitted under copyright law or it's Terms of Use, the content of this document may not be copied, reproduced, republished, downloaded, posted, broadcast or transmitted in any way without first obtaining it's written permission or that of the copyright owner.

Where the documents exist that are the responsibility of individual authors, the views contained within said documents do not necessarily represent the views of iPRT.

©iPRT Group Ltd 2020

REF.1 MfS & MfS 2

1. Manual for Streets defines a 'street' as …

   a highway that has important public realm functions beyond the movement of traffic. *Streets have a sense of place and are distinctive and are lined with and provide direct access to buildings and public spaces. Most highways in built-up areas can be considered as streets. The Manual does not define an upper limit in terms of traffic flow to define a 'street' as that was considered to be too prescriptive but as a general guide suggests a threshold of about 10,000 vehicles per day or about 1,000 vehicles per hour at peak times*.

Manual for Streets 2 (MfS2)

2. The Chartered Institution of Highways and Transportation (CIHT) publication 'Manual for Streets 2: Wider Application of the Principles' (MfS2) was published in September 2010 and forms a companion guide to "Manual for Streets" (MfS). MfS2 fills the perceived gap in design guidance between MfS and Design Manual for Roads and Bridges (DMRB) and has been endorsed by the Department for Transport (DfT).

3. The "Status and Application" section of MfS2 States:

   "DMRB is the design standard for Trunk Roads and Motorways in England, Scotland, Wales and Northern Ireland. *The strict application of DMRB to non-trunk routes is rarely appropriate for highway design in built up areas, regardless of traffic volume."*

4. MfS2 paragraph 1.3.3 states that:

   "Where designers do refer to DMRB for detailed technical guidance on specific aspects, for example on strategic inter-urban non-trunk roads, it is recommended that they bear in mind the key principles of MfS, and apply DMRB in a way that respects local context. It is further recommended that DMRB or other standards and guidance is only used where the guidance contained in MfS is not sufficient or where particular evidence leads a designer to conclude that MfS is not applicable."

5. MfS2 paragraph 1.3.4 goes on to state:

   “The application of MfS advice to all 30mph speed limits as a starting point is in keeping with MfS1”

6. Most importantly, MfS2 states in 1.3.5 - 1.3.7:

   Much of the research behind MfS1 for stopping sight distance (SSD) is limited to locations with traffic speeds of less than 40mph and there is some concern that driver behaviour may change above this level as the character of the highway changes. *However, 40mph speed limits in builtup areas cover a wide range of contexts, from simple urban streets with on-street parking and direct frontage access to 2/3 lane dual carriageways. Furthermore, local context varies not only from street to street but also along the length of a street.*

Where a single carriageway street with on-street parking and direct frontage access is subject to a 40mph speed limit, its place characteristics are more of a residential street or high street, with higher traffic flows, and may result in actual speeds below the limit. It is only where actual speeds are above 40mph for significant periods of the day that DMRB parameters for SSD are recommended. Where speeds are lower, MfS parameters are recommended.

Where there may be some doubt as to which guidance to adopt, actual speed measurements should be undertaken to determine which is most appropriate.

Similarly, in rural areas many parts of the highway network are subject to the national speed limit but have traffic speeds significantly below 60mph. Again in these situations where speeds are lower than 40mph, MfS SSD parameters are recommended.

7. Scope of M*f*S:

Speed Limit	20mph	30mph	40mph	50+mph
User Hierarchy	●	●	●	●
Team Working	●	●	●	●
Community Function	●	●	●	●
Inclusive Design	●	●	●	●
Ped/Cycle Support	●	●	●	●
Master Plans/Design Codes	●	●	●	●
Stopping Sight Distance	●	●	●	●
Frontage Access	●	●	●	●
Minimise Signs and Street Furniture	●	●	●	●
Quality Audits	●	●	●	●
Connectivity/Permeability	●	●	●	●

Table 1.1 Application of key areas of MfS advice Note: ● yes ● subject to local context

Figure a
Scope of MfS

REF.2 VISIBILITY SPLAYS

8. Drivers emerging from minor roads or accesses require adequate visibility in each direction to enable a safe manoeuvre to be made. Visibility splay envelopes are made up of two elements, the 'x' distance and the 'y' distance. The 'x' distance is the distance along the minor road (site access) from the give way line with the major road and the 'y' distance is the distance along the nearside kerb in both directions from the centre line of the minor road. Figure b shows the construction of a typical visibility splay:

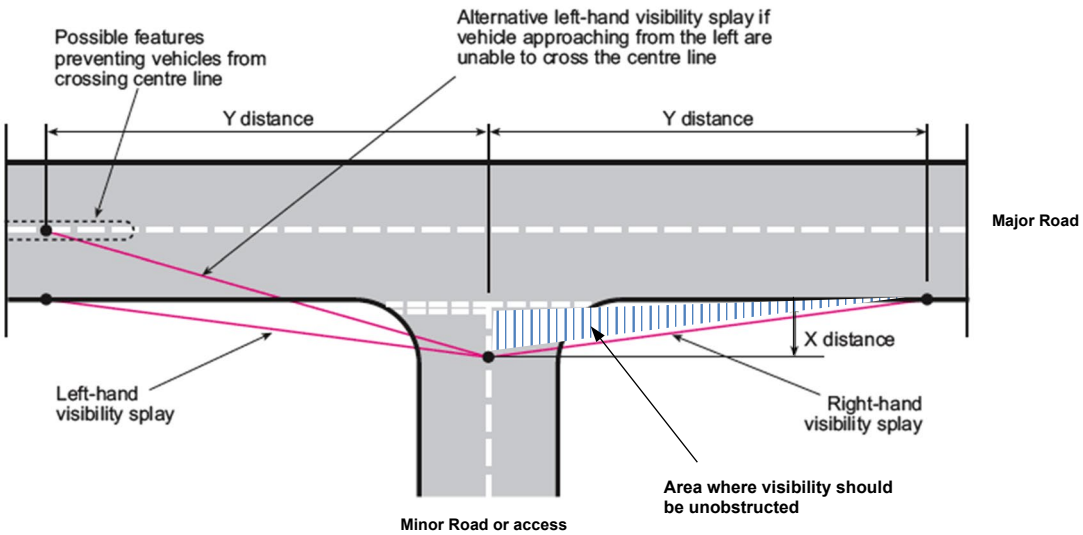

Figure b
Visibility splay requirements

9. The suggested requirements for the minor road distance (dimension 'x') is dependent upon the type of minor access and the choice of setback distance is related to the forecast traffic using the access. Figure c indicates typical requirements:

Type of Minor Road	X – Dimension (m)
The 4.5m allows vehicles to move slowly up to the give way line and leave the junction without stopping and covers the situation where two light vehicles may want to accept the same gap in the main road traffic.	4.5
The minimum necessary for motorists to see down the major road without encroaching upon it. The 2.4m set back relates to normally only one vehicle wishing to join the main road at one time.	2.4
Single dwelling or small cul-de-sac of a half a dozen dwellings, or cases of lightly used accesses and the site conditions are particularly difficult [the latter being as a relaxation]	2.0

Figure c
Typical Minor Road 'X' distance

10. The larger 'x' distance of 4.5 metres is used to reduce traffic delay on public roads and allows vehicles to move slowly up to the give way line and leave the junction without stopping. A shorter 'x' distance is appropriate as a reduced distance introduces an element of traffic calming, lowering vehicle speeds and hence, a minimum of 2.4 metres would be acceptable in this location.

11. The minimum requirement for the major road distance (dimension 'y') is dependent upon the speed of the major road. Department for Transport Design Manual for Roads and Bridges TD9/93 Table 3 [and similarly, TD42/95 Table 7/1] provides an indication of desirable minimum stopping sight distance [Figure d]

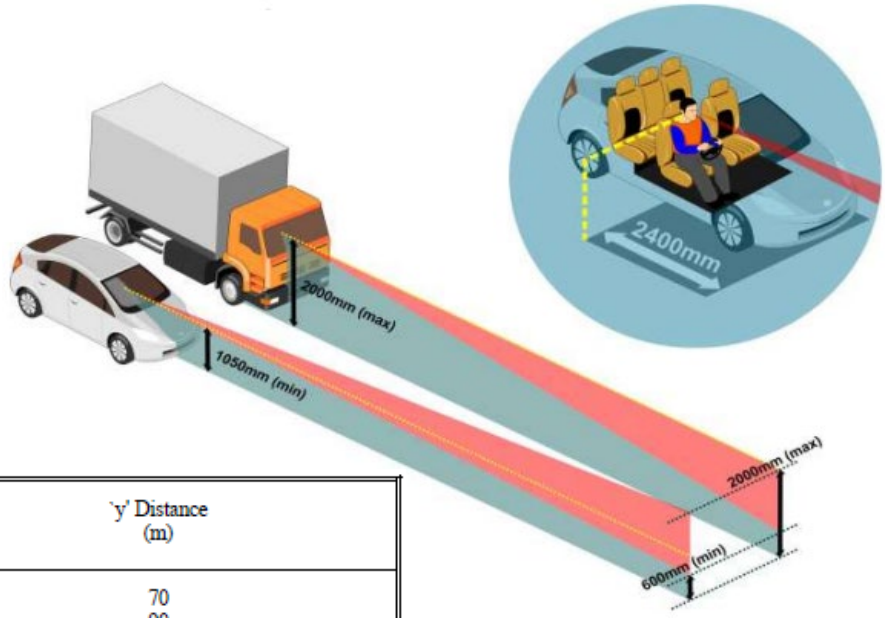

Design Speed of Major Road (kph)	'y' Distance (m)
50	70
60	90
70	120
85	160
100	215
120	295

Figure d
Visibility Splay from Minor Roads

12. In the light of recent research into vehicle stopping distances and highway safety a recent DfT approved publication 'Manual for Streets 2 – Wider Application of the Principles (MfS2), published at the end of September 2010 states the following:

- Paragraph 1.3.2 states *"It is clear from Table 1.1 that most of MfS advice can be applied to a highway regardless of the speed limit.* ***It is therefore recommended that as a starting point for any scheme affecting non-trunk roads, designers should start with MfS****".* The bold text is included within the publication itself and clearly supports the fact that vehicle stopping site distance variables are not dependent upon road classification or traffic volume, but only vehicle speed, driver perception-reaction time and deceleration

- Paragraph 1.3.6 states "*…It is only where actual speeds are above 40mph for significant periods of the day that DMRB parameters for SSD are recommended. Where speeds are lower, MfS parameters are recommended"*

Design Speed	Vehicle Type	Reaction Time	Deceleration Rate
60kph and below	Light vehicles	1.5s	0.45g
	HGVs	1.5s	0.375g
	Buses	1.5s	0.375g
Above 60kph	All vehicles	2s	0.375g (Absolute Min SSD)
	All vehicles	2s	0.25g (Desirable Min SSD)

$SSD = vt + v^2/2(d+0.1a)$
where:
v = speed (m/s)
t = driver perception-reaction time (seconds)
d = deceleration (m/s^2)
a = longitudinal gradient (%)
(+ for upgrades and - for downgrades)

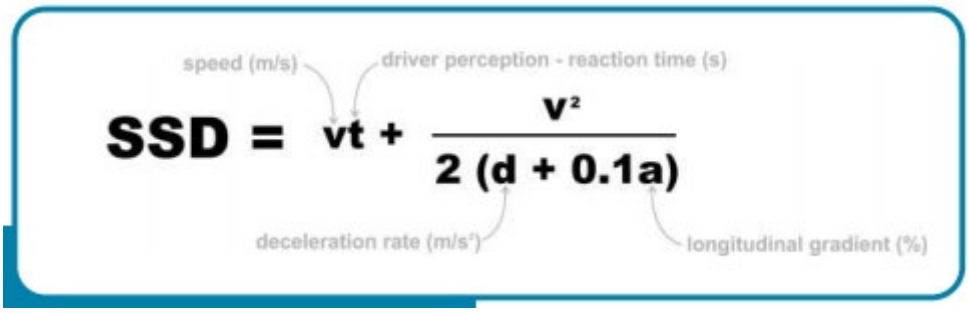

Figure e
'SSD calculations formula based on MfS

Table 7.1 Derived SSDs for streets (figures rounded).

Speed	Kilometres per hour	16	20	24	25	30	32	40	45	48	50	60
	Miles per hour	10	12	15	16	19	20	25	28	30	31	37
SSD (metres)		9	12	15	16	20	22	31	36	40	43	56
SSD adjusted for bonnet length. See 7.6.4		11	14	17	18	23	25	33	39	43	45	59

Figure f
Derived SSDs for Streets – ref: MfS

REF.3 PEDESTRIAN VISIBILITY SPLAYS

13. Pedestrian sight splays of 2 metres x 2 metres will be provided to achieve clear visibility at a height not exceeding 600 mm above the adjoining carriageway level. As necessary, this will be achieved by:

- Splaying back the building or wall abutting the entrance;
- By setting the building or wall back 2 metres behind the back edge of the footway;
- By widening the entrance by 2 metres each side.

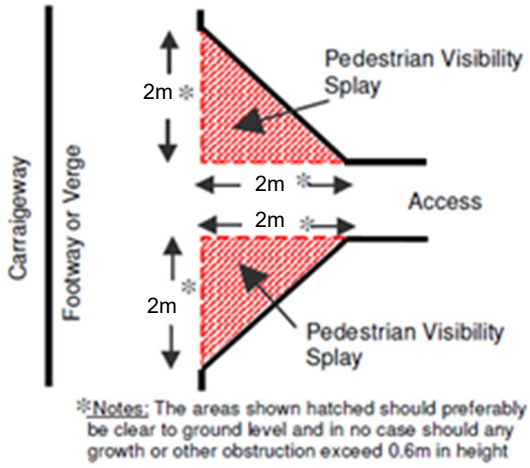

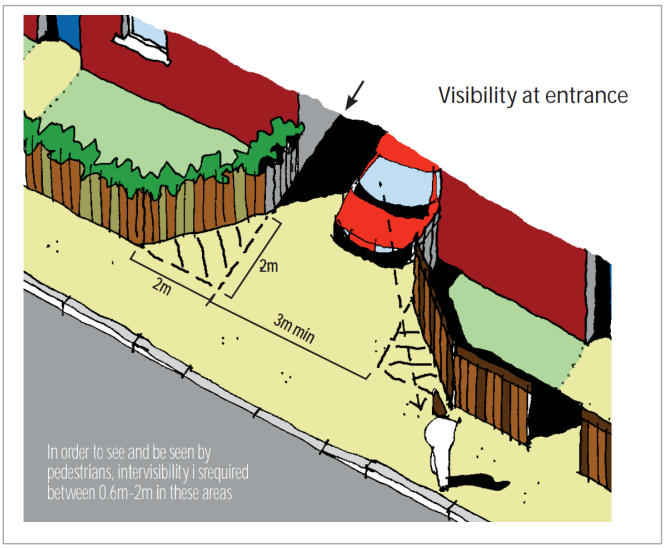

Figure g
Pedestrian Visibility Splays

REF.4 ACCEPTABLE WALKING DISTANCES – PUBLIC TRANSPORT

14. The Chartered Institution of Highways and Transportation (CIHT) publication "Guidelines for Planning for Public Transport in Developments" states

"Guidelines, not Standards; These Guidelines attempt to set out best practice. It is recognised that it will not always be possible to meet these criteria and that compromise must sometimes be made…It is the task of the professional planner, designer and engineer to decide if a lower standard is acceptable in given circumstances or if another approach would be more beneficial."

15. The above publication does state that the preferred walking distance to a bus stop is 400m, however, it further continues to state:

- "it is more important to provide frequent bus services that are easy for passengers to understand than to reduce walking distances to bus stops by a few meters"; and
- "The bus services should NOT be distorted to satisfy this criteria [400m]".

ACCEPTABLE WALKING DISTANCES [CHARTERED INSTITUTE OF HIGHWAYS AND TRANSPORTATION]			
Walking Distance	*Local Facilities **	*District Facilities***	*Other*
Desirable	200m	500m	400m
Acceptable	400m	1000m	800m
Preferred Maximum	800m	2000m	1200m
* Includes food shops, public transport, primary schools, crèches, local play areas			
** Includes employment, secondary schools, health facilities, community / recreation facilities			

Figure h
Acceptable Walking Distances [CIHT Guidelines]

16. Walking distances have been analysed by iPRT for those trips where walking was the 1st stage mode of travel and bus was the 2nd stage mode of travel. The NTS data from 2002 to 2012 was used. The analysis shows, outside of London, the average distance people walk to a bus stop is 580m and the 85th percentile distance is 810m. It is concluded at 580m there is a good prospect people would walk to a stop and 810m is the furthest distance people could be expected to walk for a bus; these findings support Figure h.

	Median	Mean	85th Percentile
Bus Stops	480	580	810
Rail Stations	810	1010	1610

17. Further, the CIHT 2018 Buses In Urban Development publications recommends:

Table 4: Recommended maximum walking distances to bus stops

Situation	Maximum walking distance
Core bus corridors with two or more high-frequency services	500 metres
Single high-frequency routes (every 12 minutes or better)	400 metres
Less frequent routes	300 metres
Town/city centres	250 metres

NOTE: Research by ScienceDirect www.sciencedirect.com drew conclusions that the standard walking access distance is 472 meters and the maximum value is 862 meters, from the point of pedestrians' willingness. Furthermore, the ideal access time and maximum acceptable time is 8.1 minutes by 50th percentile and 16.3 minutes by 85th percentile, respectively.

REF.5 ACCEPTABLE WALKING DISTANCES - WALKING

18. Whilst superseded by NPPF, the former PPG13 - Transport sets out useful guidance related to walking and cycling catchments, it states: "Walking is the most important mode of travel at the local level and offers the greatest potential to replace short car trips, particularly under 2 kilometres" (Paragraph 74):

- The Department for Transport's (DfT) document entitled 'Manual for Streets' dated 2007 at Sections 4.4 sets out the requirements for pedestrians stating "Walkable neighbourhoods are typically characterised by having a range of facilities within 10 minutes' (up to about 800 m) walking distance of residential areas which residents may access comfortably on foot".
- Paragraph 6.3.1 of the Department for Transport (DfT) document 'Manual for Streets' (2007) identifies that a 20 minute walk time (equivalent to a 1.6km walk distance) is acceptable subject to an attractive walking environment.
- Table 3.2 of the Institute of Highways and Transportation (IHT) document 'Providing for Journeys on Foot' sets out acceptable maximum walk distances of, 2km for Commuting and School journeys, 800m for Town Centres, and 1.2km for elsewhere and states: "walking accounts for over a quarter of all journeys and four fifths of journeys of less than one mile" (paragraph 1.12, page 11).

19. In support of Figure H findings, walking for all purposes as the main mode of travel was interrogated using the National Travel Survey data (NTS) to calculate the average and 85th percentile distances travelled. The NTS data had between 7,700 to 8,200 fully co-operating households covering over 18,000 individuals, and so provides a robust sample. The analysis shows, outside London, the average distance people walk is 1.15km and the 85th percentile distance is 1.95km. iPRT recommends the 85th percentile distance should be used to establish the walking catchment.

Journey Purpose	Sample Size	% Split	Median (m)	Mean (m)	85th Percentile (m)
Commuting	2166	7.1%	1000	1250	2100
Business	290	1.0%			
Education / Escort	5609	18.5%	800	1000	1600
Shopping	5958	19.6%	800	1000	1600
Other Escort	1392	4.6%	800	1100	1600
Personal Business	2730	9.0%	800	1000	1600
Leisure	5539	18.2%	800	1150	1950
Other (Including just walk)	6698	22.0%	1200	1450	2400
All	**30382**	**100%**	**800**	**1150**	**1950**

20. The actual distance that people will be prepared to walk to access facilities from the proposal site will depend on a number of factors, including the purpose of their journey. As stated previously, walking has the potential to replace car journeys for purposes such as employment and accessing local facilities where the distance is up to 2km.

National Travel Survey

21. The Revised NPPF (Feb 2019) continues to introduce the presumption in favour of sustainable development which should be seen as a golden thread running through both plan-making and decision-taking.

22. The Figure below from the National Travel Survey (Table 0403) outlines the average distances people will travel to undertake activities such as employment, shopping leisure, education and other key activities.

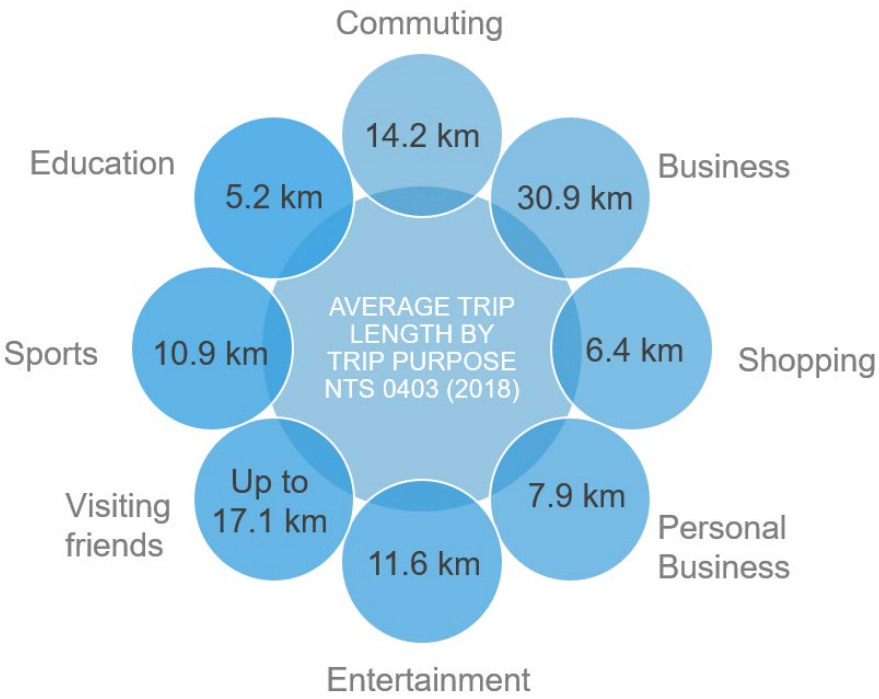

REF.6 ACCEPTABLE WALKING DISTANCES - CYCLING

23. It has been widely acknowledged that cycling has the potential to substitute for short car trips, particularly those under 5km and to form part of a longer journey by public transport.

- This is supported by Sustrans' 2004 research Travel Behaviour Research Baseline Survey 'measuring the potential for change' that cycling offers an alternative to car travel, and particularly for trips of less than 5 kilometres. This research is supported by the 2011 National Travel Survey, which specified average journey lengths, by cycle, of c5km.
- Similar to walking, cycling for all purposes as the main mode of travel was also interrogated using the 2010 to 2012 NTS. The analysis shows, outside London, the average distance people cycle is 4.3km and the 85th percentile distance is 7.25km. iPRT recommends the 85th percentile distance should be used to establish the cycling catchment.

Journey Purpose	Mean Distance Cycled (m)	85th Percentile Distance Cycled (m)
Commuting	4750	8050
Leisure	5350	9650
Shopping	2550	4000
Education / Escort	2300	4000
Business	4450	8050
Personal Business	3150	4800
Other Escort	2700	4800
All Purposes	**4300**	**7250**

- The 2015 CIHT publication Planning for Cycling states that "the majority of cycling trips are for short distances, with 80% being less than five miles and with 40% being less than two miles. However, the majority of trips by all modes are also short distances (67% are less than five miles, and 38% are less than two miles); therefore, the bicycle is a potential mode for many of these trips (DfT, 2014a). Electric bicycles extend the range that can be cycled comfortably, and combined cycle-rail or cycle-bus journeys offer an alternative to car travel for many longer trips.

Typical Layout of Cycle Stands

Sheffield Stand

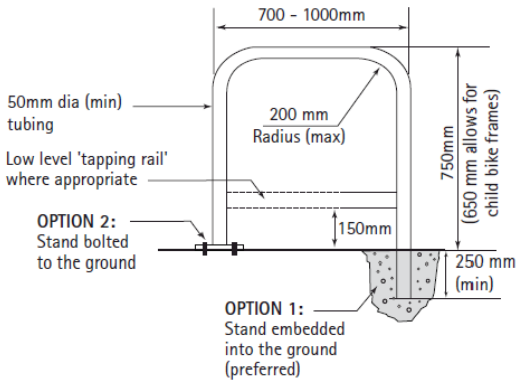

Cycle Parking Stand footprint (plan view)

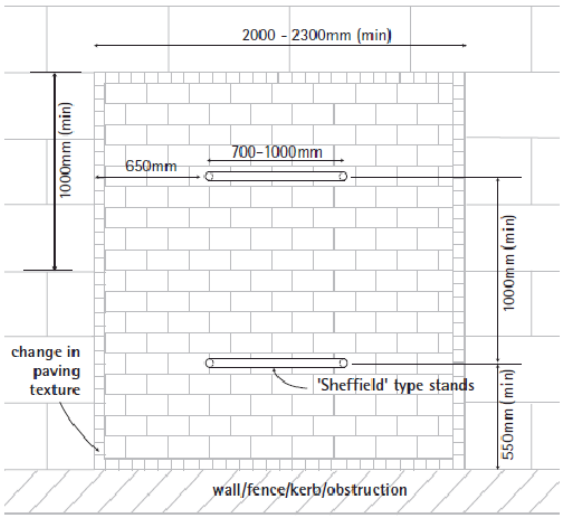

Site Requirements

- The headroom is the most important factor for this racking system. A minimum of 2600mm is required for maximum capacity.
- Leave 300 to any adjoining side wall to give space for the handlebars.
- The racks are then spaced at a minimum of 400mm apart. We have found 450mm to be a good planning spacing, giving capacity as well as ensuring ease of use.
- Please allow 2000mm for the rack itself, plus a minimum of 1700mm in front for access. This access space can be used by the next row as well.
- The racks can also be installed from a central spine. For this option, please leave 2000mm for access on both sides. The 2-sided unit is then 3100m wide.
- Racks can also be installed at a 45 or 55 degree angle to minimise space.

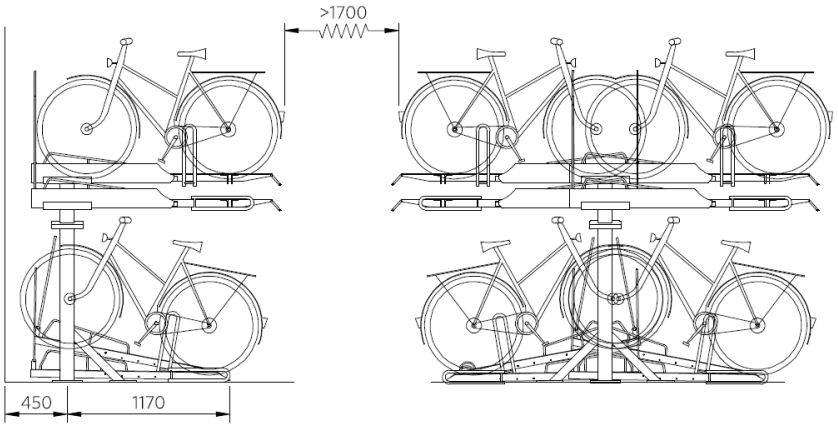

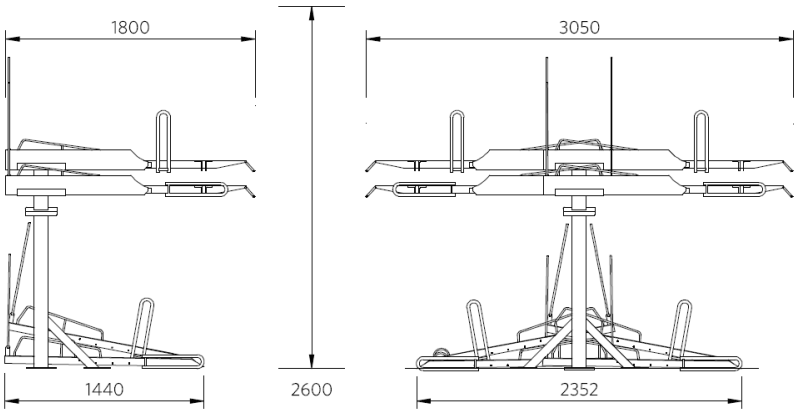

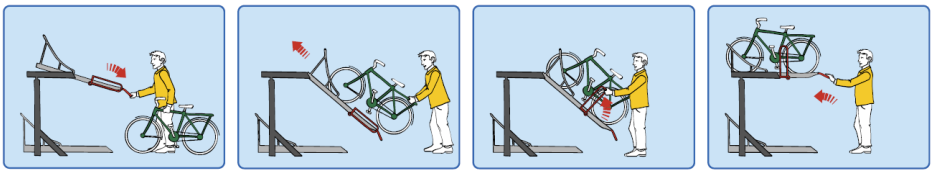

Figure i
Typical cycle stand layout (image on previous page)
High Capacity racks (bottom image)

DfT Cycling and Walking Investment Strategy

24. In April 2017, the government has published its £1.2 billion long-term plan to make cycling and walking the natural choice for shorter journeys.

25. The government wants cycling and walking to become the norm by 2040 and will target funding at innovative ways to encourage people onto a bike or to use their own two feet for shorter journeys.

26. Plans include specific objectives to double cycling, reduce cycling accidents and increase the proportion of 5 to 10 year-olds walking to school to 55% by 2025.

27. The £1.2 billion is allocated as follows:

- £50 million to provide cycling proficiency training for further 1.3 million children

- £101 million to improve cycling infrastructure and expand cycle routes between the city centres, local communities, and key employment and retail sites
- £85 million to make improvements to 200 sections of roads for cyclists
- £80 million for safety and awareness training for cyclists, extra secure cycle storage, bike repair, maintenance courses and road safety measures
- £389.5 million for councils to invest in walking and cycling schemes
- £476.4 million from local growth funding to support walking and cycling

28. In addition, the government is investing an extra:

- £5 million on improving cycle facilities at railway stations
- £1 million on Living Streets' outreach programmes to encourage children to walk to school
- £1 million on Cycling UK's 'Big Bike Revival' scheme which provides free bike maintenance and cycling classes

Access to Employment

29. The accessibility audit has identified several employment opportunities within an acceptable walking distance of the site, based on information published by the Department for Transport (DfT) and the Chartered Institution of Highways and Transportation (CIHT).

30. The CIHT document, Guidelines for Providing for Journeys on Foot suggests 2,000m as an acceptable walking distance for commuting, but also recognises a distance of up to two miles (3,200m) is practicable for walking.

31. This is supported by DfT data which shows over 40% of commuter journeys of less than 2 miles (3,200m) are by walking (Travel To Work – Personal Travel Factsheet 2011, Chart 4).

32. When considering acceptable cycling distances, DFT statistics (National Travel Survey 2014, Table NTS0306) indicate that the average cycle trip is 3.3 miles (5,300m) and DfT Local Transport Note 2/08 (LTN 2/08 – Cycle Infrastructure Design) considers that commuter trips over 5 miles (>8,000m) are not uncommon.

REF.7 FORM OF ACCESS

33. DMRB TD41/95 and TD 42/95 which generally provide a number of basic direct access layout types which form the basis of local designs

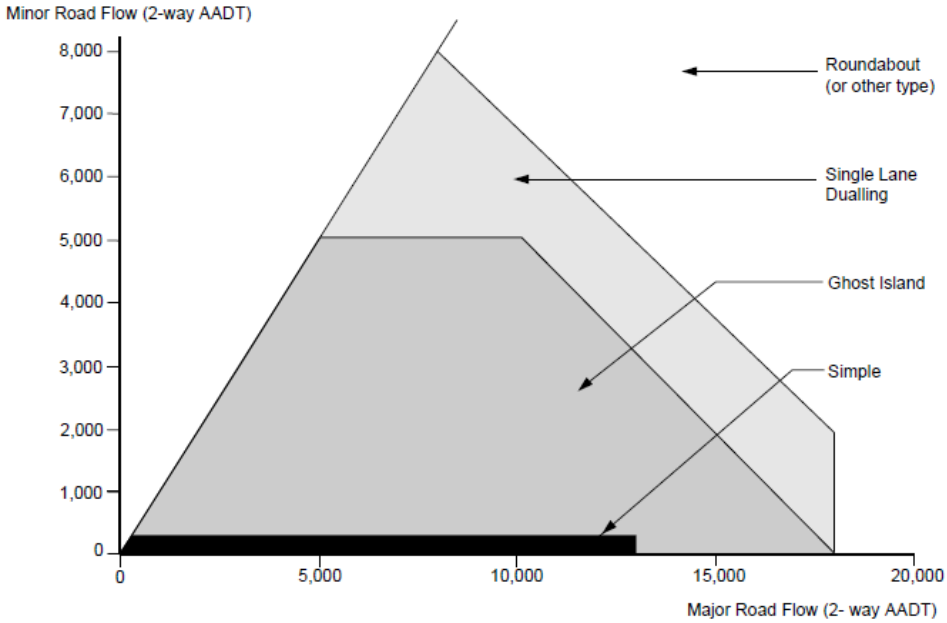

Figure j
Form of Access

REF.8 TRICS

34. The following site compatibility by main location type matrix was used [TRICS Table 4.1]:

Location Type	Town Centre	Edge of Town Centre	Suburban Area	Edge of Town	Neighbourhood Centre	Free Standing
Town Centre	-	Possibly compatible	Not compatible	Not compatible	Not compatible	Not compatible
Edge of Town Centre	Possibly compatible	-	Possibly compatible	Possibly compatible	Not compatible	Not compatible
Suburban Area	Not compatible	Possibly compatible	-	Possibly compatible	Possibly compatible	Not compatible
Edge of Town	Not compatible	Possibly compatible	Possibly compatible	-	Possibly compatible	Possibly compatible
Neighbourhood Centre	Not compatible	Not compatible	Possibly compatible	Possibly compatible	-	Not compatible
Free Standing	Not compatible	Not compatible	Not compatible	Possibly compatible	Not compatible	-

Figure k
TRICS sites compatibility

35. In October 2019, TRICS publication 'A Comparison of Vehicular Trip Rate Variation by TRICS Region and Location Type – Technical Note' was issued and concluded in paras 6.9 & 6.10:

(6.9.) These results provide us with a much greater level of clarity than we had before the study was undertaken. The question asked was 'Does regional selection in the TRICS trip rate calculation filtering process influence vehicular trip generation, when compared to location type selection?'. We can *conclude from this study that regional selection should not be the major consideration when applying trip rate*

calculation filtering criteria, whilst TRICS location type appears to be one of the most influential factors in terms of vehicular trip generation, and therefore should be one of the main filtering considerations.

(6.10.) This study reaffirms our existing TRICS Good Practice Guidance in the area of regional vehicular trip rate variation. Before we undertook this analysis, TRICS Consortium Limited was of the opinion that factors other than region had the most influence on vehicular trip rate variation, and this has in the past been indicated by the range of vehicular trip rates that can be obtained within individual trip rate calculations, the study of rank order scatterplots and other features within the TRICS system, and of course the experience of the TRICS team. We have now undertaken and published for the first time a detailed vehicular analysis of key land use categories within the TRICS database, *which has concluded that TRICS location type, when compared to regional selection, provides a much greater and consistent influence on vehicular trip rate variation.* The 2020 TRICS Good Practice Guide shall reference this report accordingly.

REF.9 DFT AND HE GUIDANCE ON DEVELOPMENT IMPACT

36. Although superseded, the technical principles of the DfT Guidance on Transport Assessment [GTA] are robust and suggest in Paragraph 2.11 that the thresholds below which a formal assessment may not be needed, and above which the preparation of a TS or a TA would be appropriate. The thresholds are based upon scenarios which would typically generate 30 two-way peak hour vehicle trips. However, the Guidance does further state that *"Whilst there is no suggestion that 30 two-way peak hour vehicle trips would, in themselves, cause a detrimental impact, it is a useful point of reference from which to commence discussions".*

37. Further, 'Guidelines for Traffic Impact Assessment' published by The Chartered Institution of Highways and Transportation' principles also remain robust and indicate that a significant traffic impact occurs when:-

- Traffic to and from the development exceeds 10% of the existing two-way traffic flow on the adjoining highway.
- Traffic to and from the development exceeds 5% of the existing two-way traffic flow on the adjoining highway, where traffic congestion exists or will exist within the assessment period or in other sensitive locations.

If the TA confirms that a development will have severe impact on the highway network, the level of impact at all critical locations on the network should be established. A particular example of severe impact would be severe worsening of congestion.

38. Highway England's Network Analysis Tool [NAT] suggests that NO material impact may occur because there is no link where development of the site would generate a two-way total of more than 30 trips. The NAT states:

- *No material impact* – because there is no link where development of the site would generate a two-way total of more than 30 trips.
- *Minimal material impact* – where there is no link where the total increase in two-way AM peak hour flow is greater than 35 trips. The choice of 35 is based on an application of the expectation that travel planning

cannot deliver a mode shift of more than 15%. Therefore, a robust travel plan to be implemented in these cases.

- *Material impact* – where the increase in total two-way flow on any link is in the range 35-50 trips. At these locations, it is expected that a robust travel plan and a case-by-case assessment of the need for physical mitigation measures.
- *Major impact* - with an increase in total two-way flow on any link in excess of 50 trips. It is expected that a robust travel plan with physical mitigation likely to be necessary and funded by the developer

REF.10 ENVIRONMENTAL IMPACT

39. 'Guidelines for the Environmental Assessment of Road Traffic' sets out two rules which justify the need for an environmental assessment and indicate potential impacts.

- Rule 1 include highway links where traffic flows will increase by more than 30% (or the number of heavy goods vehicles will increase by more than 30%).
- Rule 2 include any other specifically sensitive areas where traffic flows have increased by 10% or more (or HGV flows have increased significantly).

REF.11 CAR PARKING – NPPF

40. The NPPF mirrors previous amendments to PPG13 issued in January 2011 aiming to reduce congestion and encourage sustainable development and shared parking, particularly in town centres; This government is keen to ensure that there is adequate parking provision both in new residential developments and around our town centres and high streets.

41. The imposition of maximum parking standards under previous governments lead to blocked and congested streets and pavement parking. Arbitrarily restricting new off-street parking spaces does not reduce car use, it just leads to parking misery. It is for this reason that the government abolished national maximum parking standards in 2011. The market is best placed to decide if additional parking spaces should be provided

42. The June 2019 Revised NPPF now states:

If setting local parking standards for residential and non-residential development, policies should take into account (para 105):

a. the accessibility of the development;
b. the type, mix and use of development;
c. the availability of and opportunities for public transport;
d. local car ownership levels; and

e. the need to ensure an adequate provision of spaces for charging plug-in and other ultra-low emission vehicles.

Maximum parking standards for residential and non-residential development should only be set where there is a clear and compelling justification that they are necessary for managing the local road network, or for optimising the density of development in city and town centres and other locations that are well served by public transport (in accordance with chapter 11 of this Framework). In town centres, local authorities should seek to improve the quality of parking so that it is convenient, safe and secure, alongside measures to promote accessibility for pedestrians and cyclists (para 106).

REF.12 SETTING OF LOCAL SPEED LIMITS

43. The Department for Transport Circular 01/2013 - 'Setting of Local Speed Limits' identified that each Local Authority should respond to the guidance by undertaking a review of all their A & B class roads. The Circular also states that all traffic authorities are required to use the guidance to keep their speed limits under review to accommodate changing circumstances.

44. A key theme of the guidance is that speed limits should be evidence led, self-explaining and seek to re-enforce drivers assessment of what is a safe speed and therefore encourage self-compliance. The guidance also identifies the role of effective speed management and defines that many components of design will need to be considered in parallel to help and encourage road users to adopt compliant and safe speeds.

REF.13 CONSTRUCTION TRAFFIC GUIDANCE

45. The law says that you must organise a construction site so that vehicles and pedestrians using site routes can move around safely. The routes need to be suitable for the persons or vehicles using them, in suitable positions and sufficient in number and size. The term 'vehicles' includes: cars, vans, lorries, low-loaders and mobile plant such as excavators, lift trucks and site dumpers etc.

46. *The key message is*: construction site vehicle collisions can and should be prevented by the effective management of transport operations throughout the construction process.

47. Key issues in dealing with traffic management on site are:

- Keeping pedestrians and vehicles apart
- Minimising vehicle movements
- People on site
- Turning vehicles
- Visibility
- Signs and instructions

Keeping pedestrians and vehicles apart

48. The majority of construction transport accidents result from the inadequate separation of pedestrians and vehicles. This can usually be avoided by careful planning, particularly at the design stage, and by controlling vehicle operations during construction work.

49. The following actions will help keep pedestrians and vehicles apart:

- **Entrances and exits** - provide separate entry and exit gateways for pedestrians and vehicles;
- **Walkways** - provide firm, level, well-drained pedestrian walkways that take a direct route where possible;
- **Crossings** - where walkways cross roadways, provide a clearly signed and lit crossing point where drivers and pedestrians can see each other clearly;
- **Visibility** - make sure drivers driving out onto public roads can see both ways along the footway before they move on to it;
- **Obstructions** – do not block walkways so that pedestrians have to step onto the vehicle route; and
- **Barriers** - think about installing a barrier between the roadway and walkway.

Minimising vehicle movements

50. Good planning can help to minimise vehicle movement around a site. For example, landscaping to reduce the quantities of fill or spoil movement. To limit the number of vehicles on site:

- provide car and van parking for the workforce and visitors away from the work area;
- control entry to the work area; and
- plan storage areas so that delivery vehicles do not have to cross the site.

People on site

51. The Contractor should take steps to make sure that all workers are fit and competent to operate the vehicles, machines and attachments they use on site by, for example:

- checks when recruiting drivers/operators or hiring contractors;
- training drivers and operators;
- managing the activities of visiting drivers;
- People who direct vehicle movements (signallers) must be trained and authorised to do so and
- Accidents can also occur when untrained or inexperienced workers drive construction vehicles without authority. Access to vehicles should be managed and people alerted to the risk.

Turning vehicles

- The need for vehicles to reverse should be avoided where possible as reversing is a major cause of fatal accidents.
- One-way systems can reduce the risk, especially in storage areas.

- A turning circle could be installed so that vehicles can turn without reversing.

Visibility

52. If vehicles reverse in areas where pedestrians cannot be excluded the risk is elevated and visibility becomes a vital consideration.

53. The Contractor should consider:

- **Aids for drivers** - mirrors, CCTV cameras or reversing alarms that can help drivers can see movement all round the vehicle;
- **Signallers** - who can be appointed to control manoeuvres and who are trained in the task;
- **Lighting** - so that drivers and pedestrians on shared routes can see each other easily. Lighting may be needed after sunset or in bad weather;
- **Clothing** - pedestrians on site should wear high-visibility clothing.

Signs and instructions

54. The Contractor should:

- Make sure that all drivers and pedestrians know and understand the routes and traffic rules on site. Use standard road signs where appropriate
- Provide induction training for drivers, **workers** and visitors and send instructions out to visitors before their visit.

Construction Traffic Management Plan

55. The CTMP will be produced and would typically be expected to contain some or all of the following in detail:

- The CTMP must be appropriately titled, include the site and planning permission number;
- Contact details of the Project Manager and Site Supervisor responsible for on-site works to be provided;
- Routing of construction traffic and delivery vehicles will be shown and signed appropriately to the necessary standards/requirements. This includes means of access into the site;
- Details of and approval of any road closures needed during construction;
- Details of and approval of any traffic management needed during construction;
- Details of appropriate signing, to accord with the necessary standards/requirements, for pedestrians during construction works, including any footpath diversions;
- The erection and maintenance of security hoarding / scaffolding if required;
- A regime to inspect and maintain all signing, barriers etc;
- Details of wheel cleaning/wash facilities – to prevent mud etc, in vehicle tyres/wheels, from migrating onto adjacent highway;
- The use of appropriately trained, qualified and certificated banksmen for guiding vehicles/unloading etc;

- No unnecessary parking of site related vehicles (worker transport etc) in the vicinity – details of where these will be parked and occupiers transported to/from site to be submitted for consideration and approval. Areas to be shown on a plan not less than 1:500.
- Layout plan of the site that shows structures, roads, site storage, compound, pedestrian routes etc.
- Any temporary access arrangements to be agreed with and approved by the LPA Highways dept;
- Details of times for construction traffic and delivery vehicles, which must be outside network peak and school peak hours.
- Details of temporary traffic management measures, temporary access, routes and vehicles;
- The parking of vehicles of site operatives and visitors;
- The loading and unloading of plant and materials;
- Storage of plant and materials used in constructing the development;
- Measures to control vibration;
- Measures to control the emission of dust and dirt;
- A scheme for the recycling and disposing of waste as a result of construction works;
- Hours of operation to be agreed in writing by the local planning authority;
- The erection and maintenance of security hoardings, including decorative displays and facilities for public viewing;
- Communication plan for liaising with the public; and
- Method to prevent contamination of the drainage network during construction.

56. Traffic movements and site conditions recommendations include but not limited to:

- Immediately upon commencement, all deliveries, operatives and visitors to the Project will report to the security gate. This will be communicated to all early works contractors at their Pre-start meeting;
- The main contractor should develop a logistics plan highlighting the access point for the project, loading bay, pedestrian / vehicular segregation, welfare, storage, security & material handling that will be enforced following the full Site establishment;
- Contractors, visitors and staff will use existing pedestrian pathways until such time as the sites are enclosed and access control is operational;
- Clarification of site clearance and construction work working days and hours;
- The construction materials 'lay down' areas will allow for a staggered delivery schedule throughout the day, avoiding peak and unsociable hours;
- An integral part to the progress meetings held with all trade contractors is the delivery schedule pro-forma. In line with the recommendations of this study, all contractors should be required to give details of proposed timing of material deliveries to the site. At this stage they will be given a specific area for delivery;

- The Traffic Management Plan and the control measures therein should be included within all trade contractor tender enquiries to ensure early understanding and acceptance / compliance with the rules that will be enforced on this project;
- Under no circumstance will HGVs be allowed to lay-up in surrounding roads. All personnel in the team will be in contact with each other and site management who in turn will have mobile and telephone contact with the subcontractors; and
- Maintain roads in a clean and safe condition.

57. The Principal Contractor would be encouraged to give serious consideration to local suppliers and priorities to those with premises adjoining the proposed development. This would enable construction materials to be delivered in the shortest possible distances, minimising the impact on the highways network.

58. Further, should any abnormal loads be delivered using the highways network, this would be programmed well in advance, notified to and in accordance with the Highways England [HE] and the Police and preferably between the hours of 22:00 and 05:00 [subject to the HE and traffic police agreement] and in line with the HE's latest abnormal loads procedures [ESDAL https://www.gov.uk/esdal-abnormal-load-notification].

59. HGVs must not arrive or leave the sites except between agreed hours. Any proposed HGV movements outside the agreed hours must be notified to the Construction Manager for prior approval with the Highway Authority and where relevant, the HE.

- Security / gatemen will be in position half an hour before start of work and before the earliest delivery time.
- If relevant, persistent offenders will be reported to the Project Manager, who will action with the directors of the offending company.

60. All plant and vehicles would have engines isolated when not in use.

61. The Principal Contractor to provide a schedule, detailing the volume, timing, density and type of construction traffic in order to ensure that impact on the highways network is kept to a minimum.

62. Measures shall be developed to control the traffic on site and the Traffic Management Plan must be updated regularly as the project develops.

63. The Principal Contractor, in liaison with the Highway Authority, would install access signage for their construction traffic at designated areas to minimise the potential of vehicles taking the incorrect route. The Principal Contractor and site operators must abide by all restrictions associated with Planning Permission.

VEHICLE KEY & SPECIFICATION - GENERIC EXAMPLE

REF.14 SWEPT PATH ANALYSIS

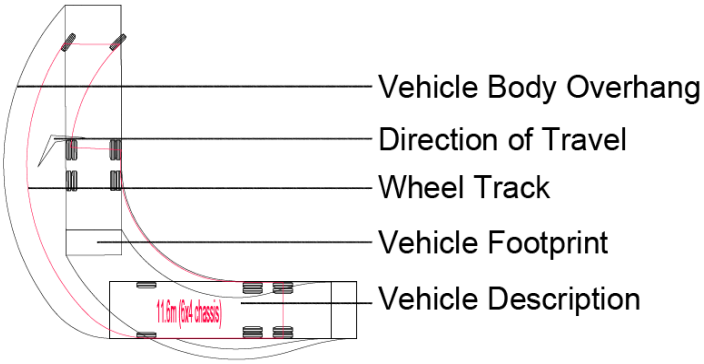

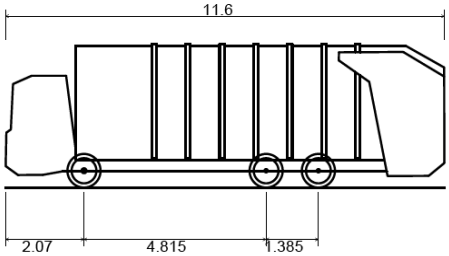

11.6m (6x4 chassis)	
Overall Length	11.600m
Overall Width	2.530m
Overall Body Height	3.751m
Min Body Ground Clearance	0.304m
Track Width	2.500m
Lock to lock time	4.00s
Kerb to Kerb Turning Radius	9.500m

Figure L
Swept Path Analysis

REF. 15 CENTRELINE RADII & WIDENING ON BENDS (informal generic advice, always consult the LHA standards)

Speed Restraint within a 20mph Zone

64. To encourage adherence to the designed maximum speed of 20mph, it is necessary to implement engineering measure such as changes in horizontal or vertical alignments, localised narrowing, chicanes, islands and or gateways.

65. The most common approach in residential developments / 20mph zones is for the road speed to be self-enforcing hence, changes in horizontal alignment / Bends: These should be tighter than the minimum specified for each street type, down to a minimum centreline bend radius of 7.5m. The deflection should be greater than 45 degrees with a mountable shoulder to enable larger vehicles to overrun.

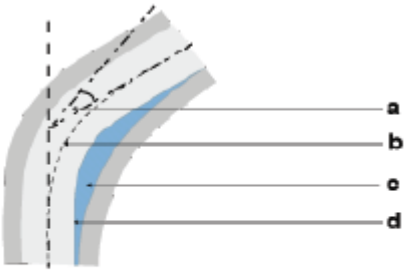

a. Deflection greater than 45°
b. Centreline bend radius less than minimum specified for road type
c. Vehicle deterrent paving 1/36 slope into road
d. 15mm maximum upstand

Road Type	Carriageway Width (m)	Minimum Centre Line Radius (m)
Local Housing Estate Distributor Roads	7.3	60
Approach Roads	6 to 6.75	26
Access Roads	5.5	20
Industrial/Commercial Estate Road	7.3 minimum	70 and over
Bus Route	6.75 minimum	30

The swept path of vehicles on bends is greater than the width of the vehicle itself. In order to enable vehicles to pass, curve widening corresponding with values set out below is necessary. The widening may be split equally each side of the road or totally on the inside over the full length of the horizontal curve. The kerb lines are to be tapered into the standard carriageway width at a minimum of 1:25 from the tangent points.

Centre line radius (m)	20	30	40	50	60	80-400	400 +
Minimum widening (m)	0.60	0.40	0.35	0.25	0.20	0.15	0.00

Figure M
Centreline Radii & Widening

REF.16 WELCOME PACK LINKS

66. As a minimum, the Welcome Pack should include the following:

Key Public Transport Information — 01

- www.liftshare.com/uk — Liftshare opportunities
- www.traveline.info — Public Transport information and journey Planning
- www.nationalrail.co.uk — National Rail information & Enquiries

Promotion of Cycling — 02

- www.sustrans.org.uk — National Cycle Network
- www.cyclinguk.org — Training & Mentoring opportunities for cyclists
- www.letsride.co.uk — British cycling – to organise events
- www.cyclestreets.net www.bikemap.net — Cycle routes planning

Promotion of Walking — 03

- www.walkit.com — Planning of walking routes, app also available
- www.livingstreets.org.uk — Events to encourage walking - National Walking Month
- www.cyclinguk.org — Training & Mentoring opportunities for cyclists

Miscellaneous — 04

- www.cyclescheme.co.uk/get-a-bike/how-it-works — Cycle to work scheme
- www.atob.org.uk/rail-ferry-zone/ — Taking bicycles on train / ferry
- www.rac.co.uk www.theaa.com/route-planner — Journey Planning
- www.betterpoints.uk — Active Travel Incentives

Personalised Travel Planning, Promotion of and information on… — 05

- **Producing Personalised local travel arrangements, highlighting the travel options available to them by walking, cycling and public transport and the benefits thereof:**
- Travelling to the development by sustainable means of transport;
- Local website(s) which includes links to cycle maps and facilities and links to local cycling groups
- Local website(s) for Public Rights of Way maps;
- Local website(s) which includes links to local walking groups;
- Investigate discounted fares offered by public transport operators; and
- Telephone numbers to local taxi companies

For live links to all the above sites please visit

https://www.iprtgroup.com/Links/

Figure N
Welcome Pack Links

REF.17 *PICS* ANALYSIS CRITERIA

PRECIPITATING FACTORS	MAIN CONTRIBUTORY FACTOR
Failed to give way	Behaviour - careless/thoughtless/reckless Failed to judge other person's path or speed Failed to look Looked but did not see Inattention
Failed to avoid vehicle or object in carriageway	Behaviour - careless/thoughtless/reckless Failed to judge other person's path or speed Failed to look Looked but did not see Inattention Excessive speed Following too close Lack of judgement of own path
Loss of control of vehicle	Impairment – alcohol Behaviour - careless/thoughtless/reckless Behaviour - in a hurry Inattention Excessive speed Inexperience of driving Interaction/competition with other road users Lack of judgement of own path Site details - bend/winding road Slippery road
Pedestrian entered carriageway without due care	Impairment – alcohol Behaviour - careless/thoughtless/reckless Behaviour - in a hurry Failed to judge other person's path or speed Failed to look Looked but did not see Inattention Crossed from behind parked vehicle etc.
Poor turn / manoeuvre	Behaviour - careless/thoughtless/reckless Failed to judge other person's path or speed Failed to look Looked but did not see Inattention Excessive speed Lack of judgement of own path

Figure O
PIC Analysis Criteria

REF.18 COMPLEMENTARY USES

67. The definition detailed below have been extracted from the DfT's GTA:

Primary Trips

68. The primary trip is one which is distributed to the road network as having the same origin before visiting the site as destination on leaving the site. These trips are predominantly home-based trips but may also be made from work or other land use category. Primary trips are further broken down into:

- Newly generated trips – in terms of food stores these types of trips are virtually zero as people must buy their food from somewhere.

Linked Trips

69. In these trips, the origin and destination zone are not the same and the application site is an intermediate stop on a route between two trip ends. Linked trips can be further broken down into:

- *Pass-by trips* – these are trips that are already present on the road network directly adjacent to the point of access to the site, which will turn into the site. These are therefore none-primary linked pass-by trips generated by people who are passing the site anyway for another reason and turn into the site.
- *Linked trips* – these are trips that will have multiple destinations either within the proposed development site or existing adjacent sites.

70. For clarification, primary trips are single-purpose trips, for example home – development – home. Non-primary trips are multi-purpose trips which call into the development en-route to another destination, for example, work – shop – home. New trips are therefore primary trips whilst pass-by and linked trips are non-primary.

Jargon Buster

- A "new trip" for a PFS is me running out of petrol for the lawnmower, jumping into the car, going to fill up my petrol can, and then going back home to use the lawnmower.
- A "pass-by" trip is when I am driving to a meeting, I realise I am out of petrol, and I pull into the next PFS I pass. I was already on that road and I am going to continue my trip to the meeting after I fill up.
- The third type of trip is the "diverted" trip. I am driving to a meeting, I realize I am out of petrol, I have a voucher for a PFS station that is a mile out of the way, I get off of my main path to go to the PFS and then I go back to my main path after I fill up.
- New trips and pass-by trips are straightforward. You are either going to the business and returning the way you came OR you happened to by driving by, you stop in because it is convenient, and then continue on your way.

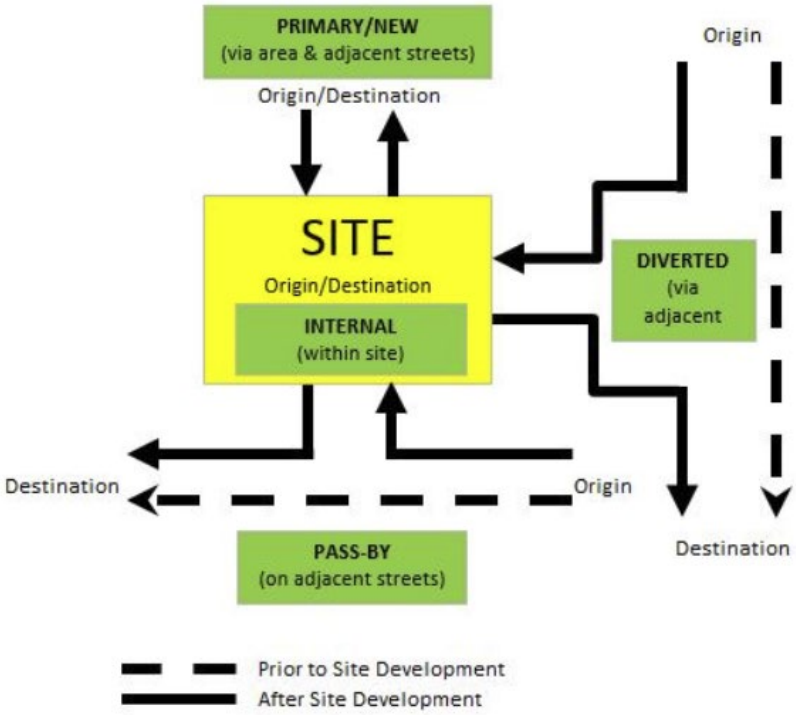

REF.19 FOOD STORE PASS-BY, LINKED TRIP AND TRIP TRANSFER RELATIONSHIPS

71. In consideration of the trip types, reference has been made to the TRICS research report 95/2 and 14/1 entitled 'Pass-by & Diverted – A Resume'. The 95/2 TRICS report was more helpful and detailed various research that has been undertaken to analyse pass-by and diverted trips to food store developments. The results of the various analyses have been summarised at Figure P below.

RESEARCH SOURCE	PERCENTAGE TRIP TYNE			
	NEW	TRANSFERRED	PASS-BY	DIVERTED
Dickinson & MacIver	0 - 7	27 - 56	9 – 65	24 - 44
MacIver & Dickinson	-	55 - 66	6 – 19	21 – 35
Hazel and MacIver	1 – 3	27 - 47	8 - 33	28 – 48
Shaw	47 - 65		10 – 37	16 – 36
Harris and McCoy	40 - 61		6 - 30	19 - 33
JMP	62 - 64		36 - 38	

Figure P
Pass-by and Diverted Linked Trips Research

72. Figure P results in the broad approximations in Figure Q:

SOURCE	PERCENTAGE
New	0 – 10
Transferred	30 – 60
Pass-by	10 – 30
Diverted	20 - 40

Figure Q
Pass-by and Diverted Broad Approximations

73. The latest TRICS research Report 14/1 is less clear in that:

- The document references a variety of research and literature and advises that for foodstores on a major commuting route in a large urban area the diverted and pass-by proportion may range between 25% and 40% whilst on less significant commuting routes in out-of-town locations and in urban areas with smaller populations a proportion of 15% to 20% should be assumed.
- On this basis, the level of diverted and pass-by trips for the proposed food store could be taken as 40% in the Friday PM peak and 30% in the Saturday peak.
- the number of completely new trips on the highway network resulting from the opening of a new store is very low (in some cases less than 5%), particularly during the PM peak periods. The studies show that what actually occurs is a change in existing traffic patterns.

74. There have been a number of studies which have been undertaken to determine the level of linked trip which have concluded that a significant level of linked trip making takes place on multi-store sites.

- TRICS Research Report 05/1 'Trip Attraction Rates of Developments with Multiple Retail and Leisure Uses' also states that the more individual units located on any one site the greater the number of linked trips.
- A study by England and Lyle for Barnsley Metropolitan Borough Council undertook analysed household survey data to assess the differences between linked trips for the three main foodstore in the study area – Asda at Old Mill Lane, Morrisons at Westway and Tesco Extra, Wombwell Lane. The overall pattern of linked trips is shown in Figure R which shown that as much as 90% of trips are linked between a food retail store and the town centre but overall, 51.4% of trips are linked with the town centre.

	Asda	Morrisons	Tesco	Overall
Respondents making linked trips	20.1%	41.0%	19.1%	29.8%
Linked trips to Barnsley town centre (excluding don't knows)	74.4%	90.0%	47.4%	51.4%

Figure R
Extract E&L Barnsley Town Centre Retail Study

75. A recent TA undertaken by JMP for Meteor Retail Park in Derby stated:

"Given JMP's significant experience of investigating the likely levels of 'new' trips for such retail sites we consider that below [Figure R] presents a realistic set of proportions and trip numbers of pass-by, diverted and linked trips that can associated with the proposed development site. Also given the geographical proximity to the Morrison's store to the proposed development site there will also be a degree of transfer of Morrison's trips to the new food retail facility."

New Trips taken from Table 5.11		Weekday Evening Peak		Saturday Peak	
		Arrivals	Departures	Arrivals	Departures
Linked	20	188	205	228	253
Pass-by	20	188	205	228	253
Diverted	15	141	154	171	189
Morrison's transfer	15	141	154	171	189
Actual Total Trips		**282**	**308**	**343**	**379**

Figure S
Extract from JMP TA

Note: Meteor Retail Park is much more substantial in its offering than the proposed hence, 30% of trips were assumed to be new.

76. Finally, a study by Urban Analytical and City Science concluded that the development of new-generation foodstores in in-centre and edge-of-centre locations does indeed increase the propensity of shoppers to link their trips between foodstores and town centre shops/services.

77. In summary, and based on the evidence above, it is robustly assumed that at least 90% of trips are passby / linked and occur between the proposed site and adjoining retail / commercial / employment centres and the City Centre and 10% Transferred.

itransport PLANNING

Creative Minds, *Intelligent Thinking*

Registered Office
Lugano Building, 57 Melbourne Street, Newcastle upon Tyne, NE1 2JQ
DDI: 0845 47 48 851 Cell: 07886 225 813 Fax: 0871 900 7432

Offices in…
Newcastle Upon Tyne | London | Leeds | Manchester | Birmingham | Edinburgh

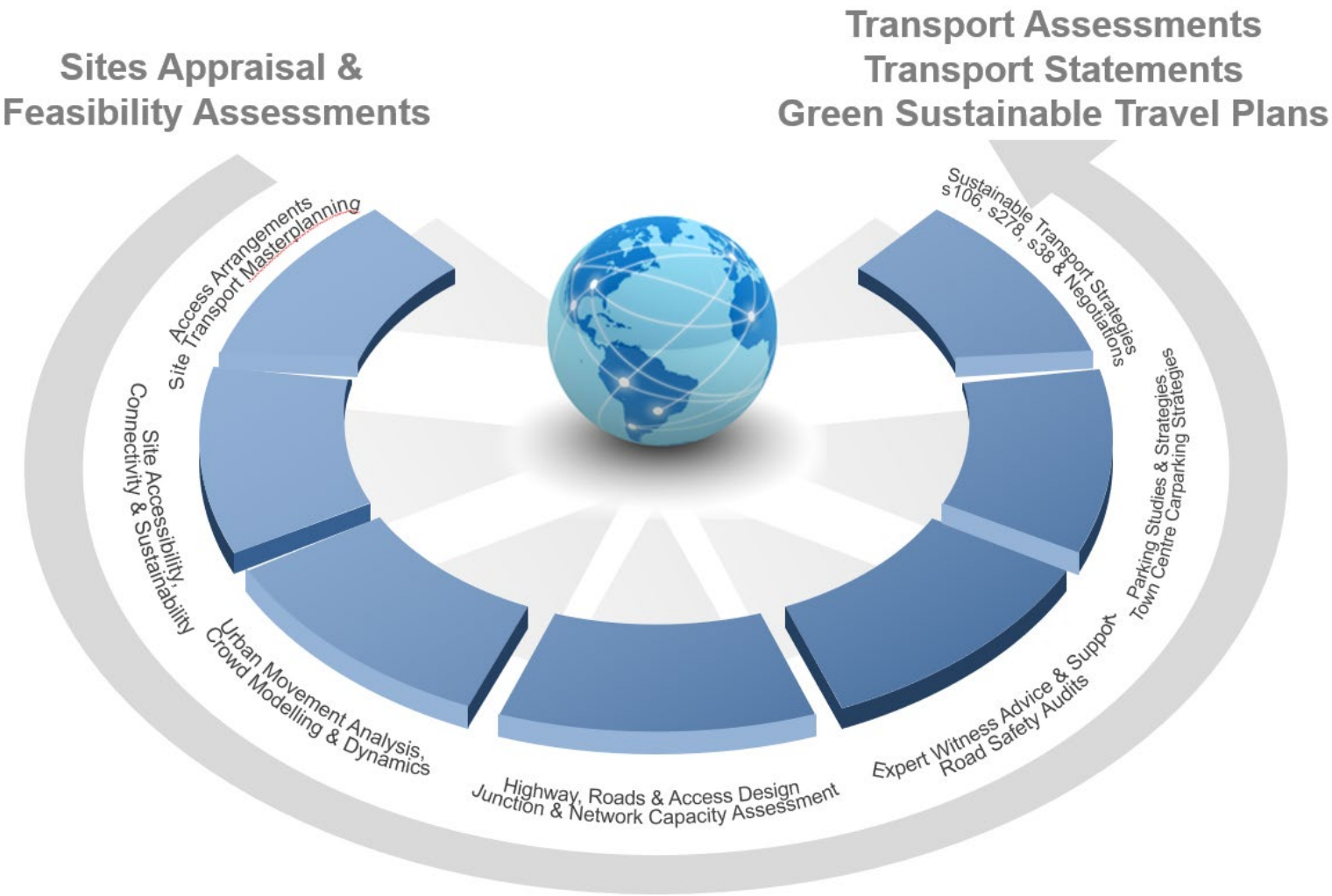

Member of iPRT Group of Companies