BURO HAPPOLD

Technical Note

Project	Mayfield
Subject	Well Investigation and Treatment Technical Note
Project no	046688
Date	3 February 2022

Revision	Description	Issued by	Date	Approved (signature)
P01	Well Summary Design Note	RM	28/01/22	CB
P02	Copy including appendices and minor corrections.	RM	03/02/22	CB

1 Introduction

The purpose of this technical note is to document the investigation, assessment and treatment of historic water wells at Mayfield Manchester. A historical plan of the Mayfield Print and Dye Works (supplied by RoC in the early stages of remediation) indicated there to be 10 No. wells in the vicinity of the Lawns Area, and BGS records indicated a further 2 wells in the vicinity of the former brewery. The wells were investigated where practical and safe by trial trenching and if found were assessed and either decommissioned in line with EA guidance or retained for potential future use as a source of washdown water for the park.

2 Background

A copy of the historic plan provided by RoC is included in Appendix A. A summary of the well locations overlain on a more recent aerial image is provided below in Figure 1.

This report has been prepared for the sole benefit, use and information of U+I PLC for the purposes set out in the Design note or instructions commissioning it. The liability of Buro Happold in respect of the information contained in the report will not extend to any third party. All concepts and proposals are copyright © 1976 – 2022 Buro Happold. All rights reserved. Issued in commercial confidence.

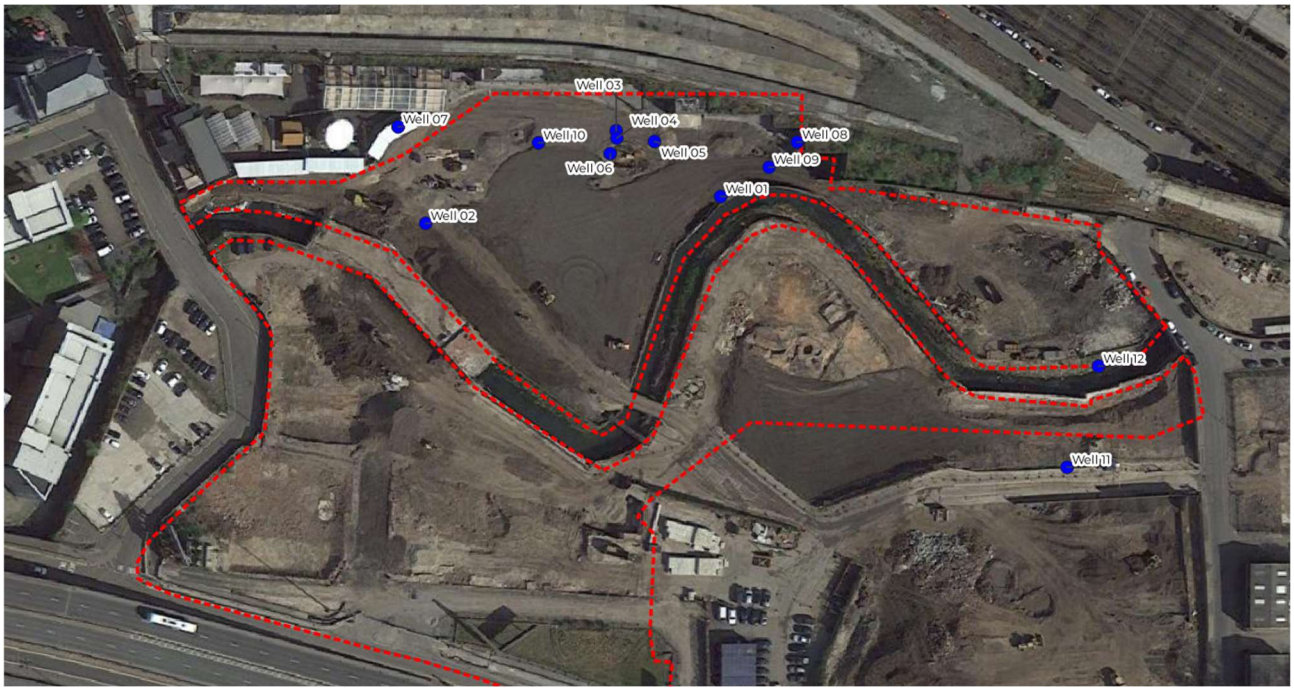

Figure 1 - Approximate locations of wells based on historical information

3 Summary Status of Wells

Intrusive investigation (trial trenching) was undertaken where possible in the areas around the locations shown in Figure 1 to expose and assess the historic well features. Where the wells plotted under buildings or steep embankments, investigations could not be carried out as this would destabilise existing structures or embankments. Where the wells were safely located, they were assessed for potential future use and either retained or decommissioned as summarised below.

Table 1 Well status.

Well Ref.	Information Source	Location	Encountered coordinates and ground level (mAOD)	Description / Status
Well 1	Historical plan of Mayfield Print & Dye Works	Lawn	E385139.90 N397613.40 GL 33.18 (top of brickwork)	**Description of well**: Encountered. 2.1m diameter circular structure cut directly into sandstone. Rubble present in well shaft to near surface. Brickwork present above well, covering approximately half of the diameter. **Status:** Well decommissioned in line with EA guidance as shown in Civic Engineers Drawing 1076-14-CIV-XX-EW-DR-S-300, Appendix B.
Well 2	Historical plan of Mayfield Print & Dye Works	Lawn	E385053.50 N397606.30 GL 33.10 (top of brickwork)	**Description of well**: Brick circular/conical structure. Inner diameter is 0.75m in the top 0.45m height, increasing to 1.00m diameter below 0.45m. Water level 3.60m below the top of the brick opening (29.50mAOD). Soft base to well recorded at 10.11m below the top of the brick opening (22.99mAOD). **Status:** Well retained as potential future source of washdown water, as detailed in Civic Engineers

Well Ref.	Information Source	Location	Encountered coordinates and ground level (mAOD)	Description / Status
				drawing MAY101-WSC-EXT-CIV-DR-7020-0201, Appendix B.
Well 3	Historical plan of Mayfield Print & Dye Works	Lawn batter	Not located (unsafe to excavate at this location due to steep embankment).	**Description**: N/A **Status:** Unable to investigate and impractical to cap due to location in batter – multi layer geogrid protection installed in near surface as detailed in Civic Engineers Drawing MAY101-WSW-EXT-CIV-DR-7060-5001, Appendix B.
Well 4	Historical plan of Mayfield Print & Dye Works	Lawn batter	Not located (unsafe to excavate at this location due to steep embankment).	**Description**: N/A **Status:** Unable to investigate and impractical to cap due to location in batter – multi layer geogrid protection installed in near surface as detailed in Civic Engineers Drawing MAY101-WSW-EXT-CIV-DR-7060-5001, Appendix B.
Well 5	Historical plan of Mayfield Print & Dye Works	Lawn batter	Not located (unsafe to excavate at this location due to steep embankment).	**Description**: N/A **Status:** Unable to investigate and impractical to cap due to location in batter – multi layer geogrid protection installed in near surface as detailed in Civic Engineers Drawing MAY101-WSW-EXT-CIV-DR-7060-5001, Appendix B.
Well 6	Historical plan of Mayfield Print & Dye Works	Lawn	E385116.08 N397620.83 GL 33.46 (top of sandstone)	**Description:** The visible section of the well is carved directly into sandstone bedrock. The diameter of the well (at least the visible section) is approximately 2m. Depth to water was recorded as 3.4m below existing surface level (top of sandstone) (30.06mAOD). A soft bottom was encountered at around 10m. **Status:** Well retained as potential future source of washdown water, as detailed in Civic Engineers drawing MAY101-WSC-EXT-CIV-DR-7020-0201, Appendix B.
Well 7	Historical plan of Mayfield Print & Dye Works	Freight Island	N/A	**Description:** N/A - plots beneath concrete slabs and retaining structures in Freight Island (beyond red line site boundary) – no investigation or treatment is practical at this location. **Status:** N/A
Well 8	Historical plan of Mayfield Print & Dye Works	Outside Mayfield Depot	N/A	**Description:** Adjacent to Mayfield Depot – Difficult to investigate due to depth of overburden and proximity to foundations of the Depot – no investigation or treatment is practical at this location. **Status:** N/A

Well Ref.	Information Source	Location	Encountered coordinates and ground level (mAOD)	Description / Status
Well 9	Historical plan of Mayfield Print & Dye Works	Lawn	E385154.80 N397621.71 GL 34.76 (top of brickwork)	**Description:** Encountered, 0.80m diameter, brick circular structure. Well was full of soil and rubble at 2m depth. Depth of well unknown. Probed to approx. 4m with scaffold bar; base of soil not proven. **Status:** Well decommissioned in line with EA guidance as shown in Civic Engineers Drawing 1076-14-CIV-XX-EW-DR-S-301, Appendix B.
Well 10	Historical plan of Mayfield Print & Dye Works	Lawn	E385086.44 N397627.00 GL 34.10 (top of brickwork)	**Description:** Encountered. 1.60m diameter, brick circular structure. Soil and plastic sheeting within well near surface. Depth of well unknown. Attempted to probe with scaffold bar; unable to push in (potentially obstructed by loose bricks within fill material). **Status:** Well decommissioned in line with EA guidance as shown in Civic Engineers Drawing 1076-14-CIV-XX-EW-DR-S-301, Appendix B.
Well 11	BGS records	Brewery Basement	Co-ordinates & level TBC Location as plotted in Civic Engineers Drawing ref: MAY101-WSC-EXT-CIV-DR-7060-0200, Appendix B.	**Description:-** Well 11 descends into an open chamber approx 2m diameter and over 100m deep with water standing at 4.6m below ground level. The well included a steel rising main which was removed. **Status:** Well retained as potential future source of washdown water, as detailed in Civic Engineers drawing MAY101-WSC-EXT-CIV-DR-7020-0201, Appendix B.
Well 12	BGS records	Brewery Basement	N/A	**Description:** Extensive excavation in this area proved no well. Position considered unlikely to be correct and more likely to be a double plot of Well 11. **Status:** N/A

4 Retained Well Features.

Where wells have been retained as a potential source of washdown water for the park, the well manhole detail drawing MAY101-WSC-EXT-CIV-DR-7020-0201 confirms the level of protection provided.

The tops of the existing well shafts were reduced to rockhead level and provided with a reinforced pre-cast concrete slab with a smaller diameter opening to be used as a base to provide future well access. The sides of the manhole chambers consist of pre-cast rings within a minimum 150mm surround of cast in-situ concrete, and the top detail comprises heavy duty precast concrete manhole sections bedded with mortar, proprietary bitumen, resin, mastic or sealant strips. The manholes to the retained wells are designed to resist vertical and lateral infiltration of surface water and shallow groundwater and will not transmit contaminants potentially present in surface water into the aquifer.

Surface water and shallow groundwater will be prevented from entering the wells by the presence of pre-cast and cast in situ concrete. The retained manholes are not considered to provide a pathway for any contaminants contained in surface water or shallow groundwater to enter the aquifer. Lateral migration of groundwater below the base level of the manhole installations will however continue unaffected.

Appendix A – Historic Well Location Plans

3102654

L&N.W.R. Manchester

Position of Old Wells at Mayfield Print Works

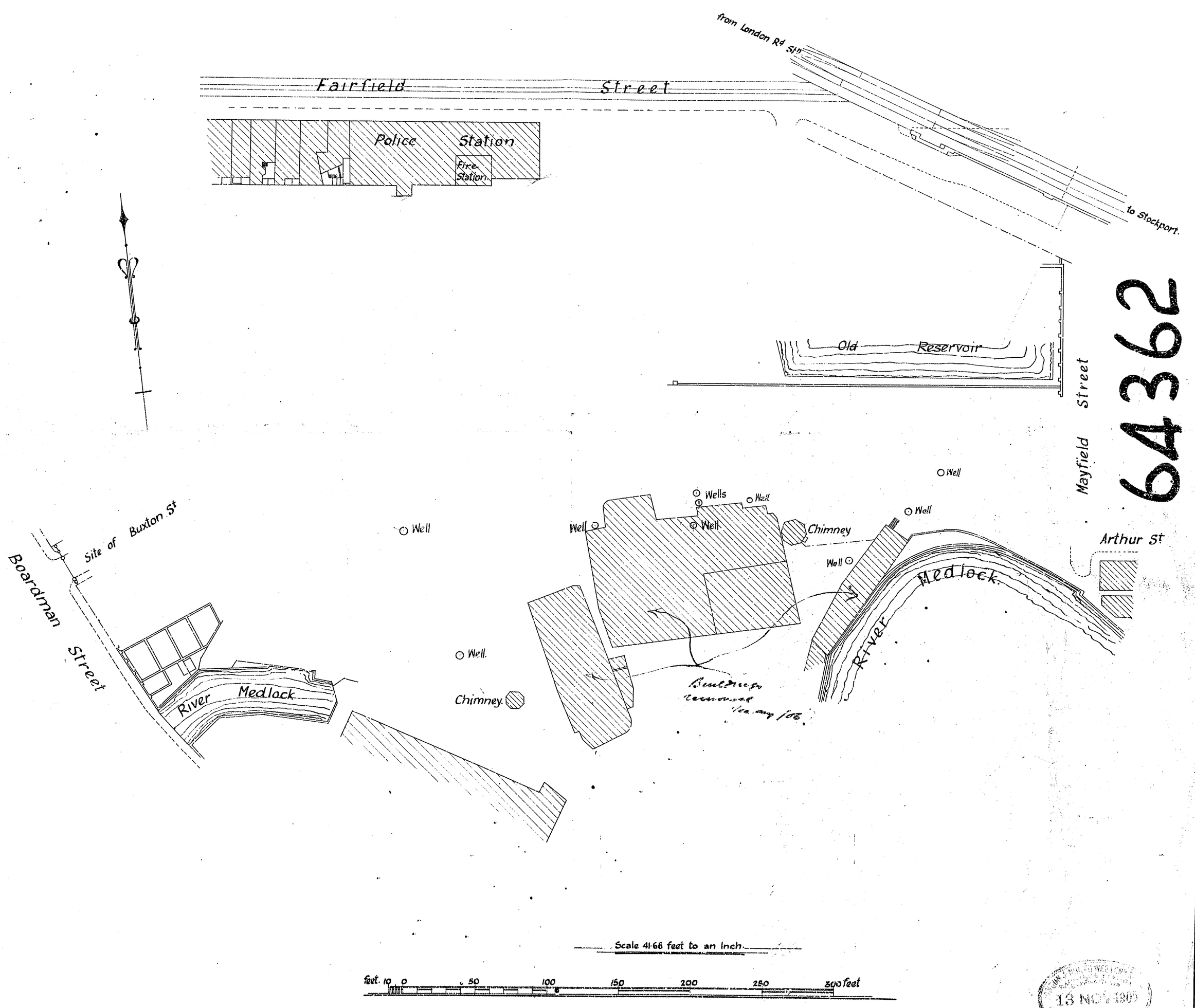

6362

13 NOV 1905

Copy sent L. Tunnell. 16 Nov/05 + 7 June/
Office to not put on.

Appendix B – Well Locations and Treatment Details

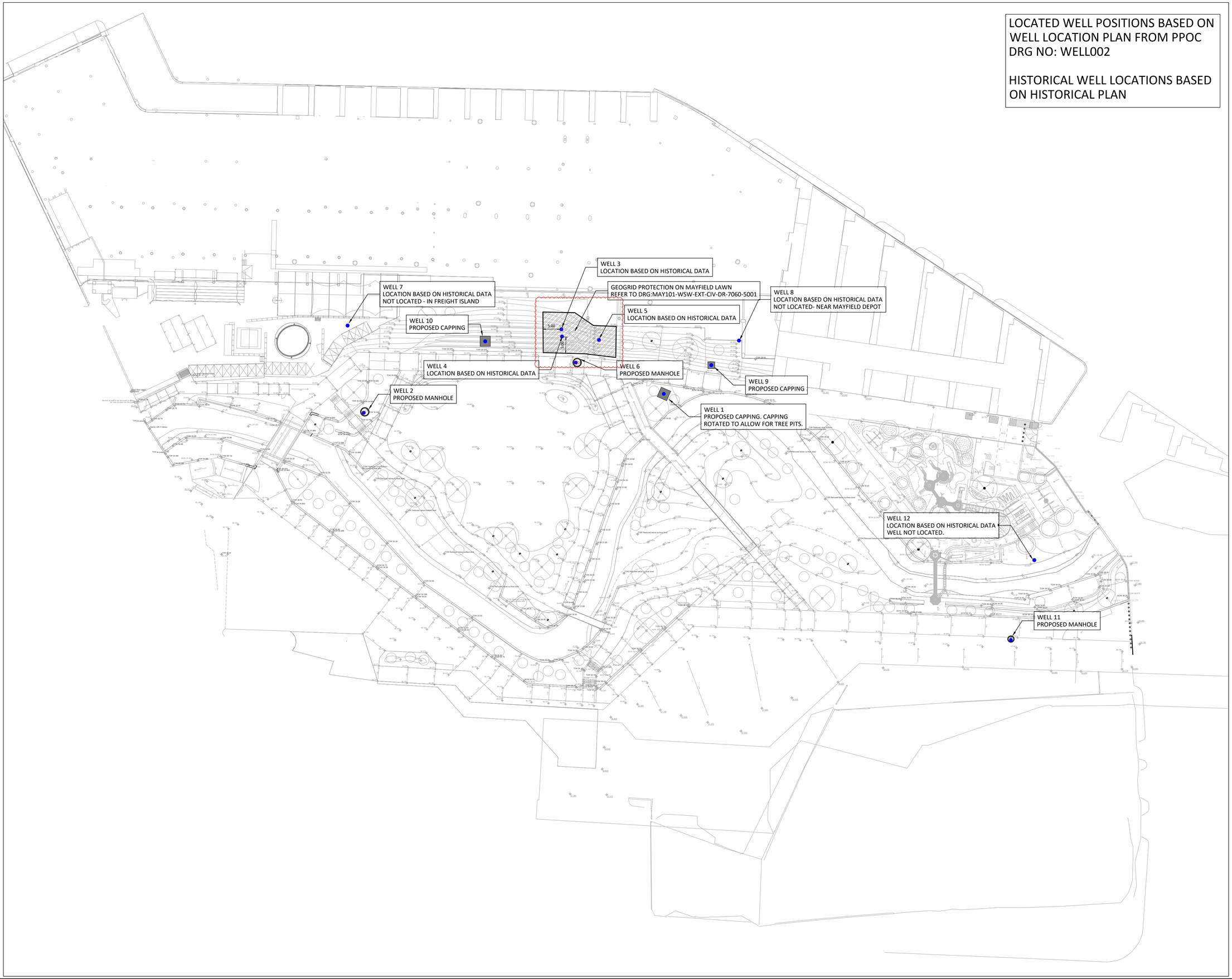

LOCATED WELL POSITIONS BASED ON WELL LOCATION PLAN FROM PPOC DRG NO: WELL002

HISTORICAL WELL LOCATIONS BASED ON HISTORICAL PLAN

Standard Notes

1. This drawing is to be read in conjunction with all relevant Architect's and Engineer's drawings and the specification.
2. This drawing should not be scaled.
3. All dimensions are to be verified by the contractor on site.
4. All discrepancies should be reported to the C.A. prior to the commencement of the works.

© CIVIC ENGINEERS LIMITED

Notes and Keys

SEE DRAWING MAY101-WSC-EXT-CIV-DR-7060-0200 FOR MANHOLE CONSTRUCTION DETAILS

Date	Rev	Description	Drawn	Chkd
24.01.22	A.1	NOTE AMENDED. GEOGRID ADDED	CD	CK
30.07.21	A	ISSUED FOR CONSTRUCTION	CD	CK
29.07.21	S4.1	WELL LOCATIONS ADDED	CD	CK
07.07.21	S4	ISSUED FOR APPROVAL	CD	CK
24.06.21	S3-01	WELL LOCATIONS AMENDED TO PPOC PLAN	CD	CK
04.06.21	S3	ISSUED FOR REVIEW	CD	CK

Civic Engineers

MANCHESTER Carver's Warehouse, 77 Dale Street, Manchester, M1 2HG. Tel: 0161 228 6757
LONDON Reeds Wharf, 33 Mill Street, London SE1 2AX. Tel: 020 7353 2977
LEEDS Tower Works, Unit D2.01, Globe Road, Leeds, LS11 5QG. Tel: 0113 2025 130
GLASGOW Gresham Chambers, 45 West Nile St, Glasgow, G1 2PT. Tel: 0141 370 1829

www.civicengineers.com

Project

MAYFIELD PARK

Title

WELL LOCATION PLAN

Status

STAGE 5

Project Number	Scale @ A1	Date Created	Drawn	Checked	Suitability
1076-13	1:500	27.05.21	CD	CK	----

Drawing Number	Revision
MAY101-WSC-EXT-CIV-DR-7060-0200	A.1

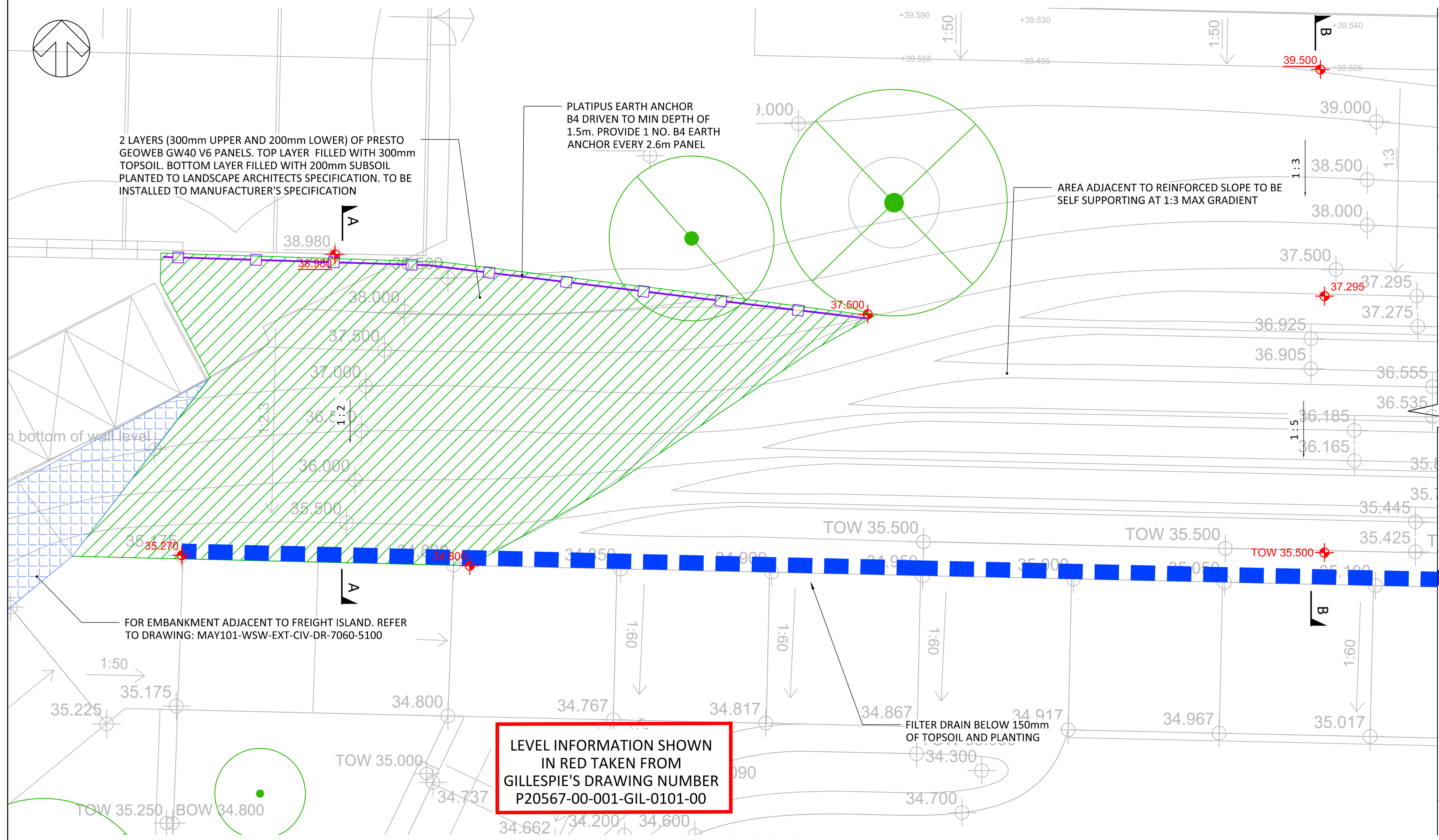

R10 WEST SECTION
SCALE - 1:100

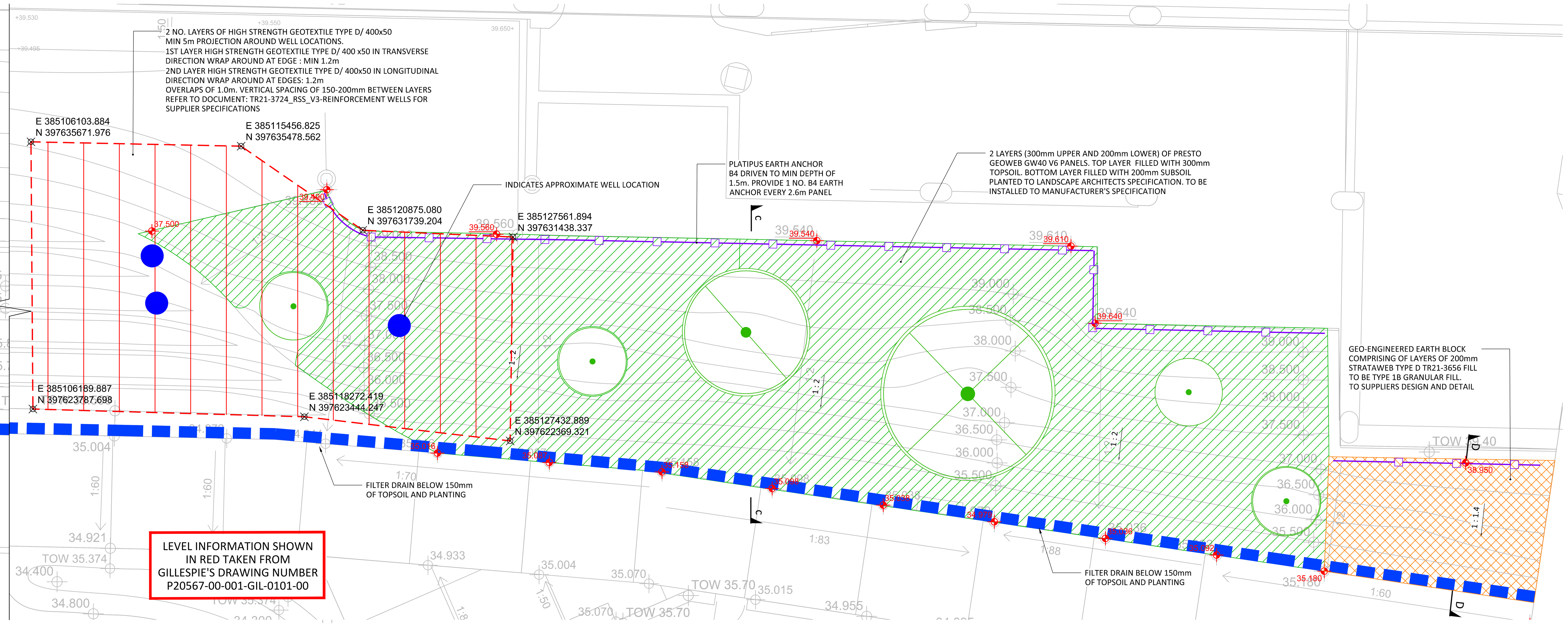

R10 EAST SECTION
SCALE - 1:100

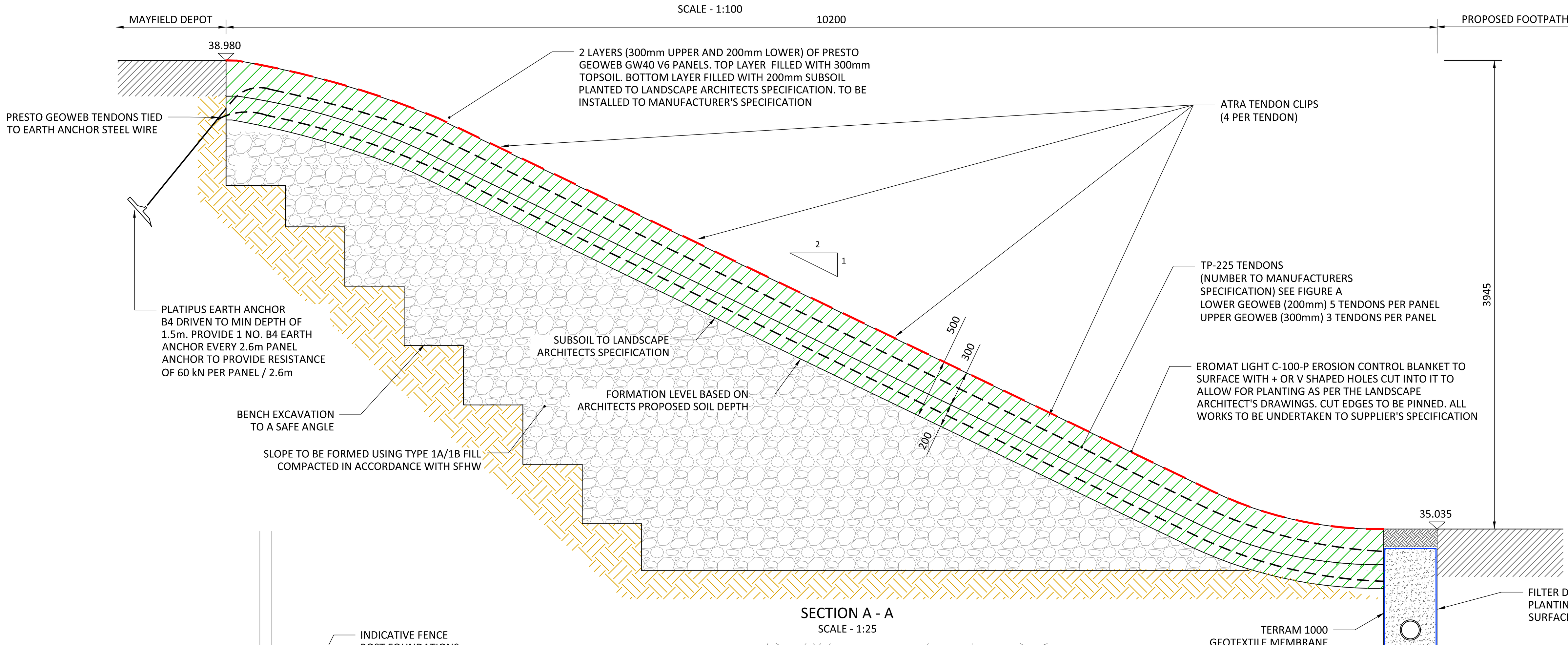

SECTION A - A
SCALE - 1:25

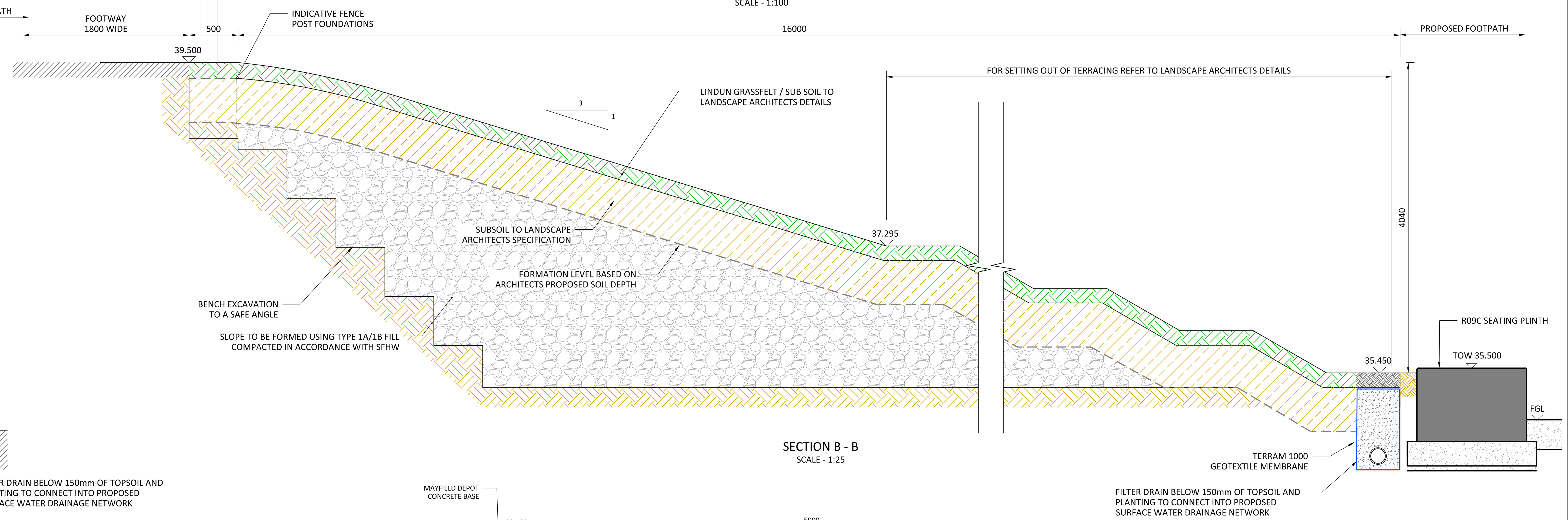

SECTION B - B
SCALE - 1:25

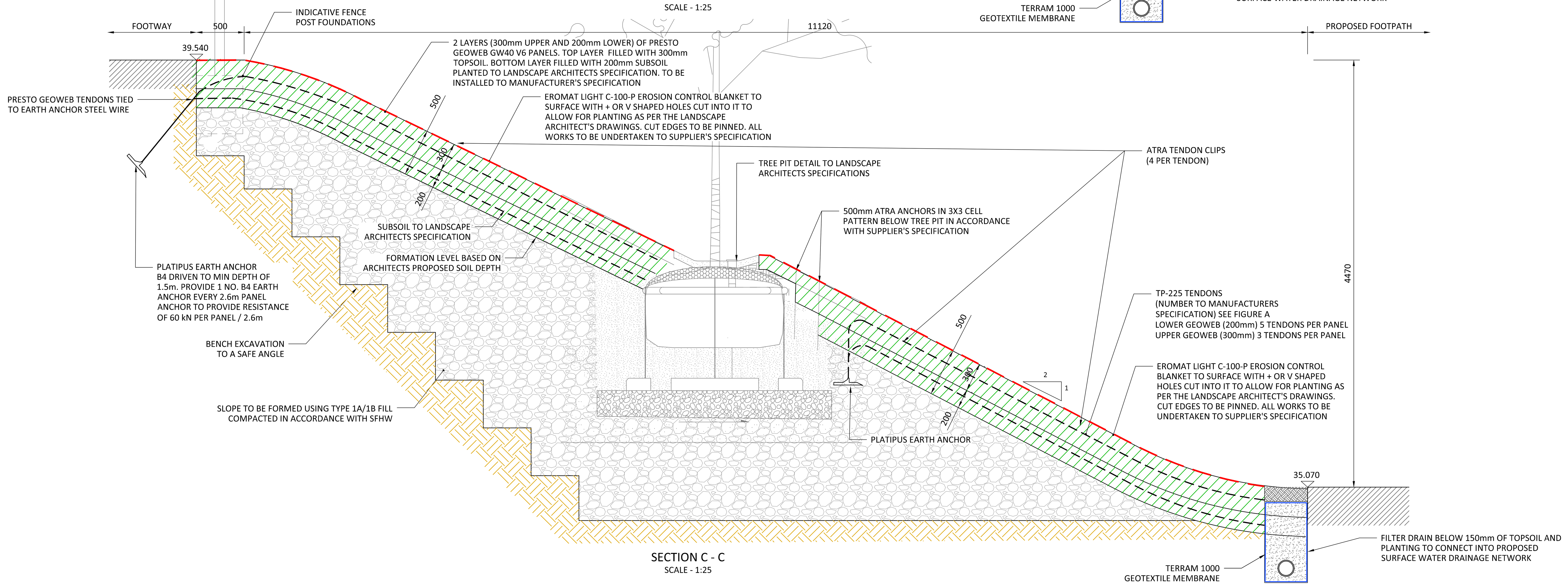

SECTION C - C
SCALE - 1:25

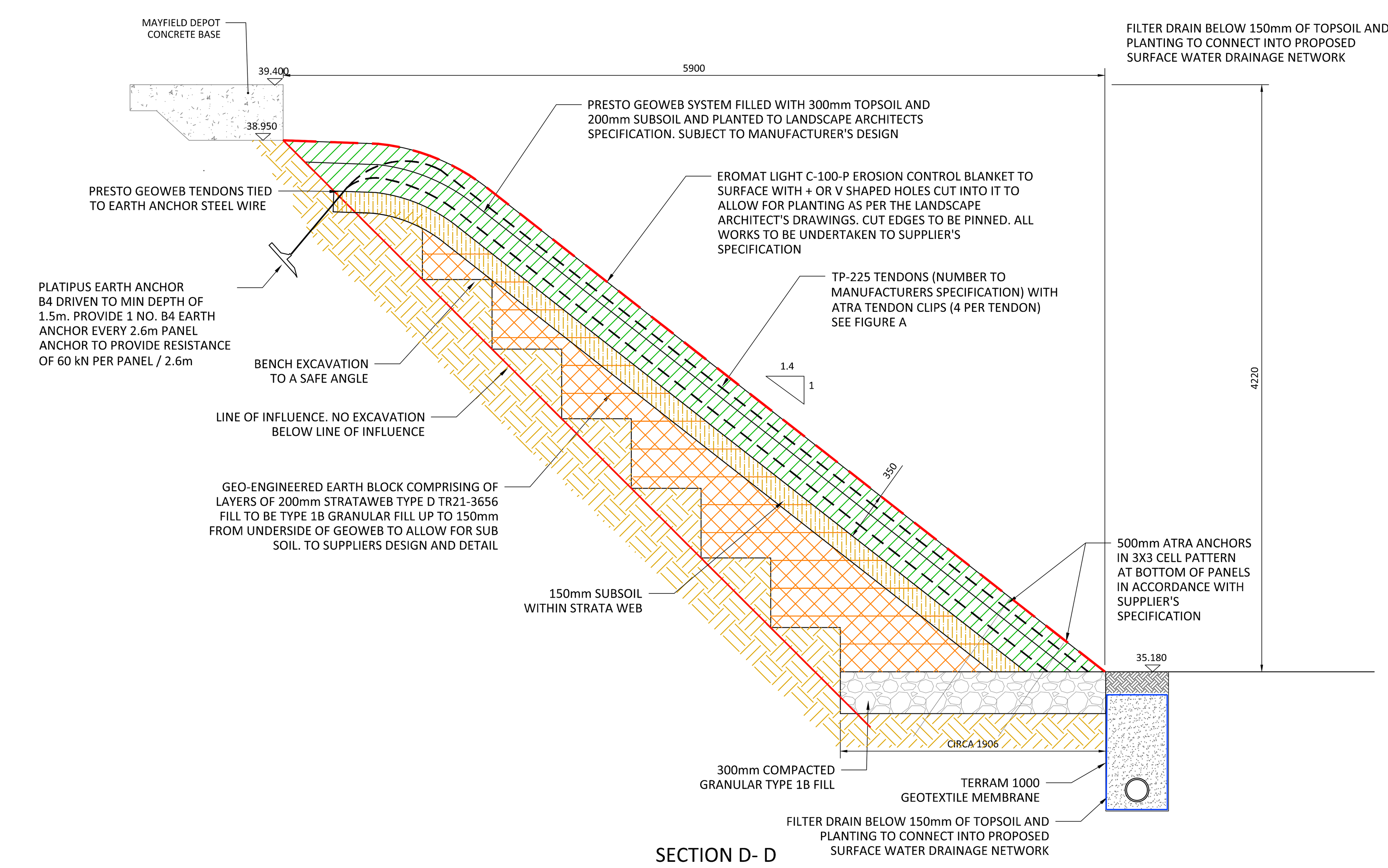

SECTION D- D
SCALE - 1:20

Standard Notes

1. This drawing is to be read in conjunction with all relevant Architect's and Engineer's drawings and the specification.
2. This drawing should not be scaled.
3. All dimensions are to be verified by the contractor on site.
4. All discrepancies should be reported to the C.A. prior to the commencement of the works.

© CIVIC ENGINEERS LIMITED

Notes and Keys

1. ALL DIMENSIONS ARE IN MILLIMETRES AND LEVELS IN METRES AOD UNLESS STATED OTHERWISE
2. EXISTING INFORMATION IS TAKEN FROM MALCOLM HUGHES TOPOGRAPHICAL SURVEY DRAWING DATED AUGUST 2017 COMBINED WITH PP O CONNOR SURVEY FILE "RIVER WALL NW AREA TOPO 8-2-21"
3. PROPOSED LEVELS ARE BASED ON GILLESPIE'S DRAWING NUMBER P20567-00-001-GIL-0101-00
4. ALL EARTHWORKS TO BE UNDERTAKEN IN ACCORDANCE WITH SPECIFICATION FOR HIGHWAY WORKS UNLESS STATED OTHERWISE

⚠ CARE TO BE TAKEN IN EXCAVATION TO CREATE SAFE ANGLE OF REPOSE TO AVOID SLOP FAILURE AND UNDERMINING OF DEPOT HARDSTANDING

⚠ WORKS IN IMMEDIATE VICINITY ARE IN ABEYANCE SUBJECT TO INVESTIGATIONS TO CONFIRM DETAILS OF STRUCTURE

EARTH ANCHOR (DRIVEN)
HISTORICAL WELL LOCATION
EXTENTS OF GEOTEXTILE REINFORCEMENT

Date	Rev	Description	Drawn	Chk
07.12.21	A.6	EARTH ANCHOR DETAILS ADDED	CD	CK
29.11.21	A.5	GEOTEXTILE REINFORCEMENT OVER WELLS	CD	CK
26.11.21	A.4	NOTES AMENDED	CD	CK
25.11.21	A.3	FOOTPATH AND POST ADDED. TOTAL GEOWEB DEPTH AMENDED TO 500mm.	CD	CK
02.11.21	A.2	GEOWEB CONTINUATION	CD	CK
15.09.21	A.1	TREE LOCATION AMENDED	CD	CK
10.09.21	A	DETAILS AMENDED AS PER COMMENTS	CD	CK
01.09.21	B.1	SECTIONS AND DETAILS ADDED	CD	PM
13.08.21	B	ISSUED FOR CONSTRUCTION	CD	PM
27.07.21	S04.1	ISSUED FOR APPROVAL	TS	PM
30.06.21	S04	ISSUED FOR APPROVAL	TS	PM

Project: MAYFIELD PARK

Title: MAYFIELD LAWN
R10
DETAILS

Civic Engineers

MANCHESTER Carver's Warehouse, 77 Dale Street, Manchester, M1 2HG. Tel: 0161 228 6757
LONDON Reeds Wharf, 33 Mill Street, London SE1 2AX. Tel: 020 7253 2977
LEEDS Tower Works, Unit 02-01, Globe Road, Leeds, LS11 5QG. Tel: 0113 2025 130
GLASGOW Gresham Chambers, 45 West Nile St, Glasgow, G1 2PT. Tel: 0141 370 1829
www.civicengineers.com

Status: CONSTRUCTION

Project Number	Scale @ A0	Date Created	Drawn	Checked	Suitability	Drawing Number	Revision
1076-13	VARIES	30.06.21	TS	PM	-	MAY101-WSW-EXT-CIV-DR-7060-5001	A.6

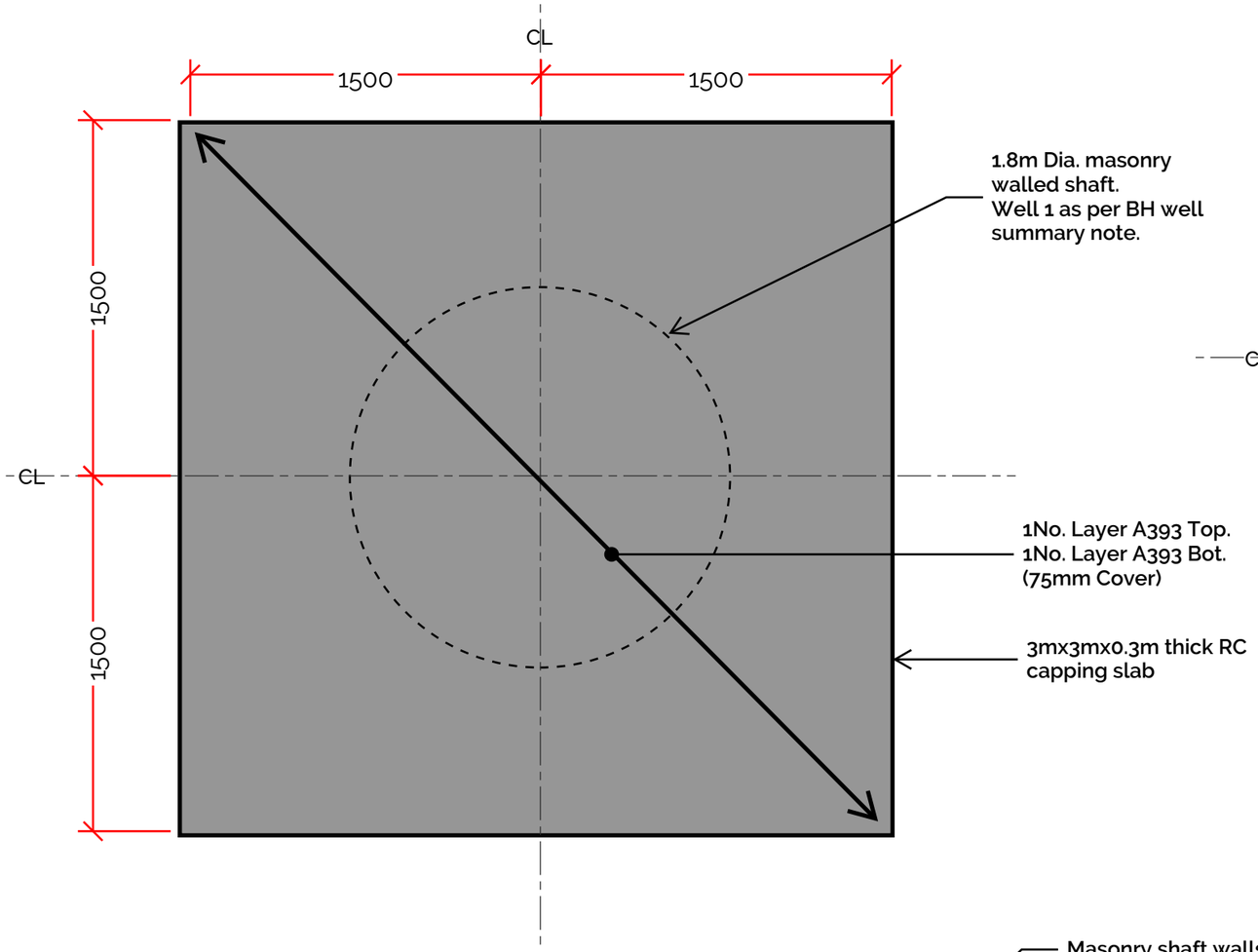

WELL 1 CAPPING SLAB PLAN
SSL = 33.48m & FFL = 34.486

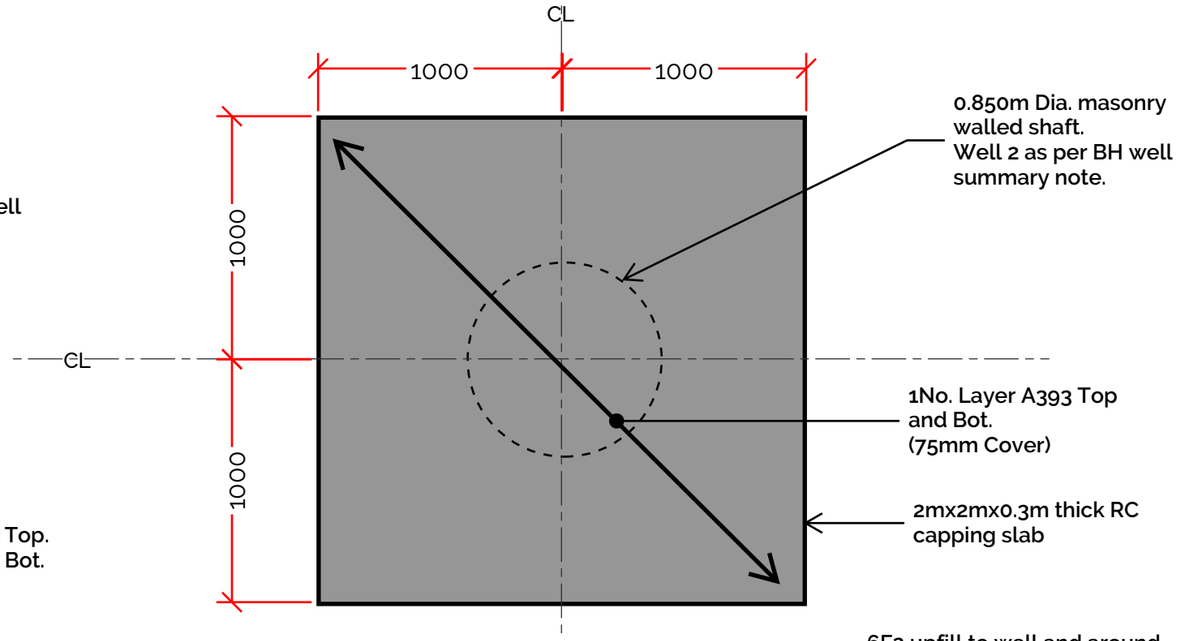

WELL 2 CAPPING SLAB PLAN
SSL=33.10m & FFL = 35.725m

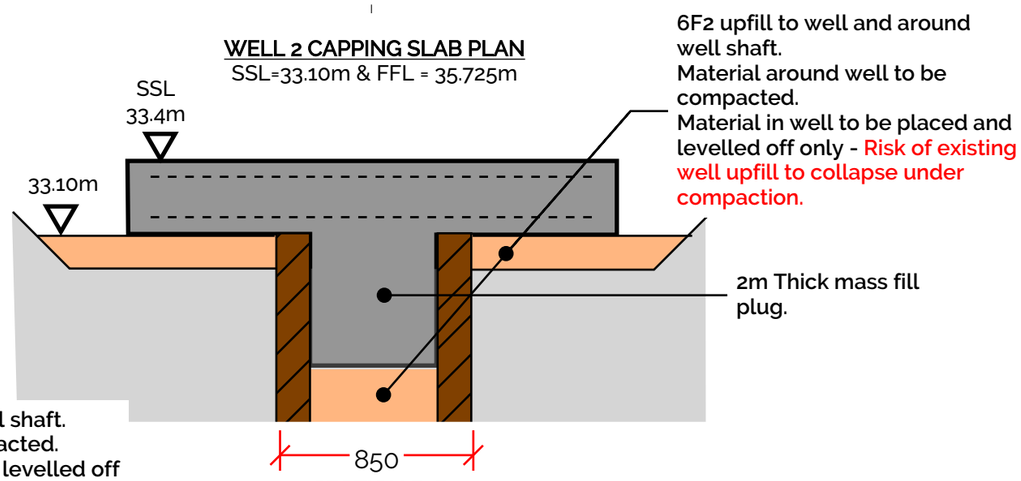

SECTION B-B

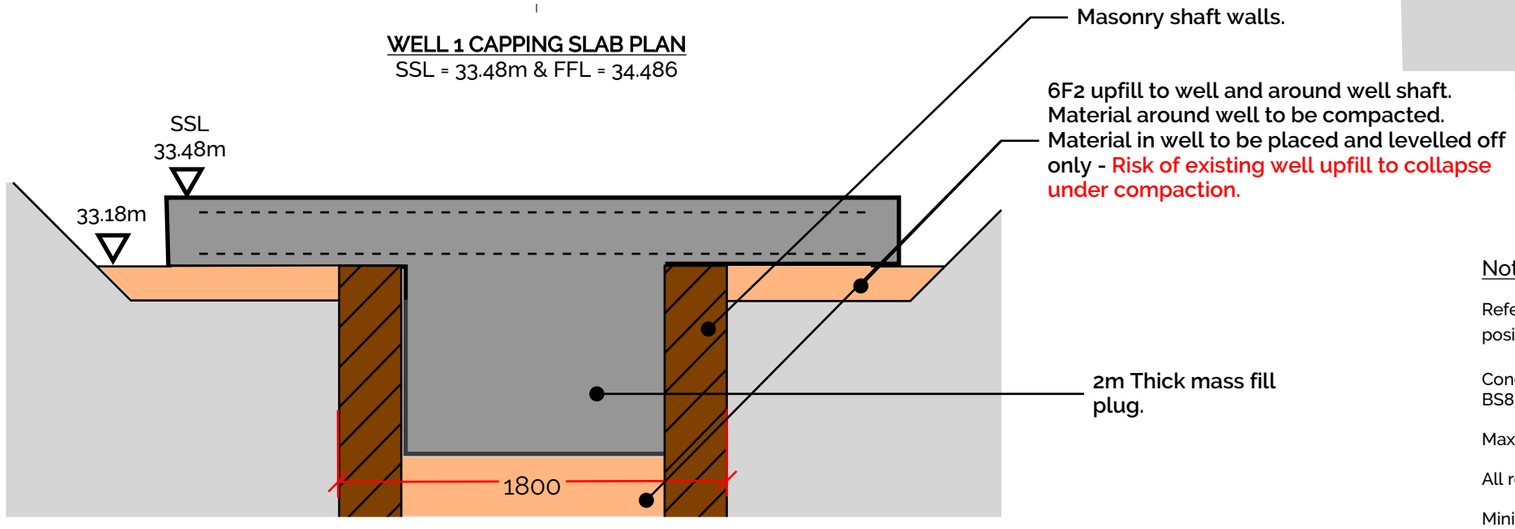

SECTION A-A

Notes

Refer to Buro Happold Mayfield Welll Summary report for position and condition of revealed relic wells.

Concrete to be designated mix FND2 in accordance with BS8500-1 and suitable for class 2 sulphate conditions.

Max aggregate 20mm

All reinforcement to be Grade 500B UNO

Minimum reinforcement lap length to be 40 x Dia.

Any unsutiable / soft ground to be removed and upfilled in compacted 6F2 material except from within the shafts.

Do not place concrete when there is risk of freezing or overheating.

Levels provided by PPoC drawing C0408-EW001.

Date	Rev	Description	Drawn	Chkd
13.05.21	C01	FOR CONSTRUCTION	NH	LH
19.04.21	P01	FOR APPROVAL	LH	RD

Civic Engineers
MANCHESTER / LONDON / LEEDS / GLASGOW
www.civicengineers.com

Project: Mayfield Park, Enabling Works

Title: Well 1 and 2 Capping

Status: CONSTRUCTION

Project Number	Scale @ A3	Date Created	Drawn	Checked
1076-14	NTS	14.4.21	LH	RD

Drawing Number	Revision
1076-14-CIV-XX-EW-DR-S-300	C01

© CIVIC ENGINEERS LIMITED

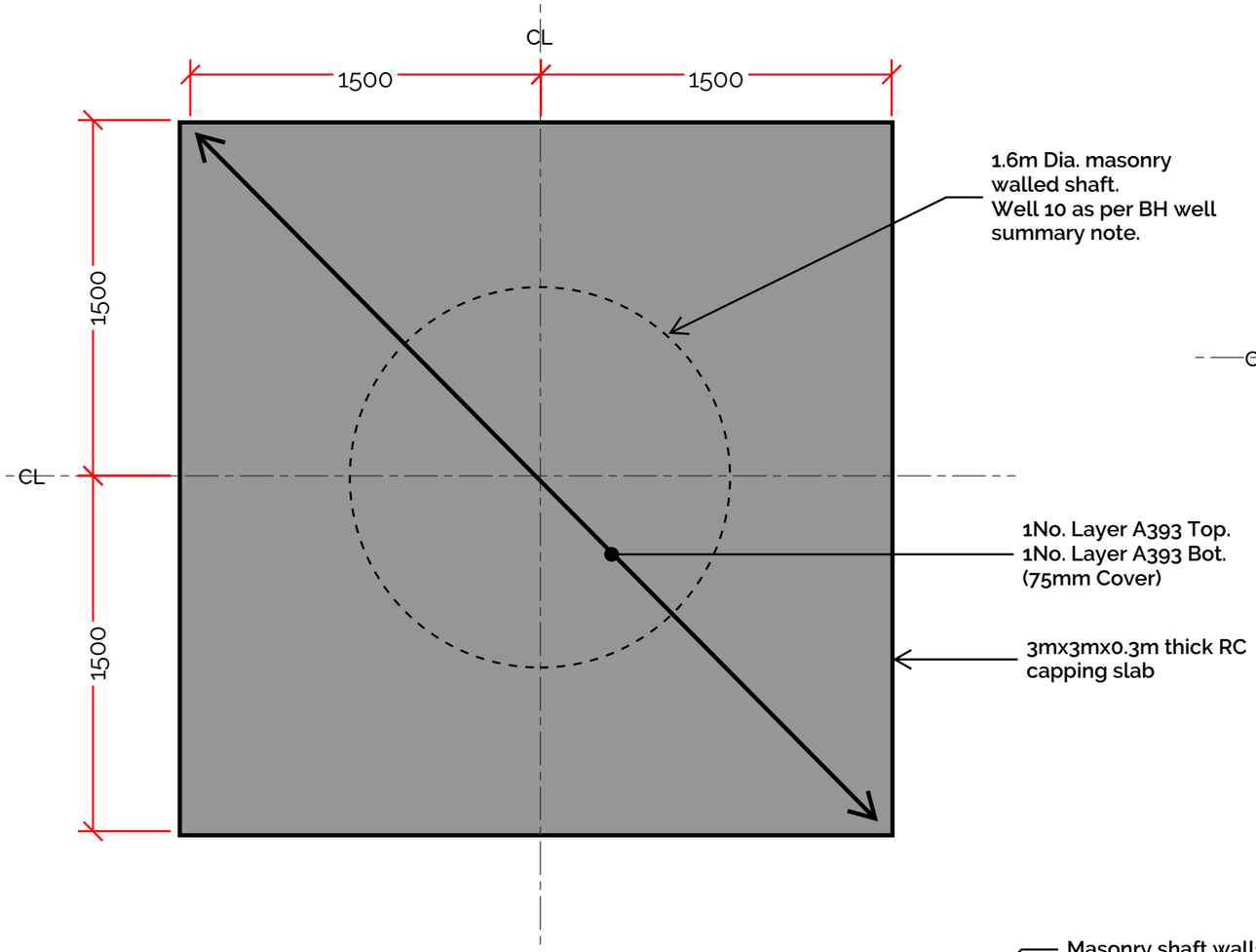

WELL 10 CAPPING SLAB PLAN
SSL = 34.4m & FFL = 35.445m to 36.165

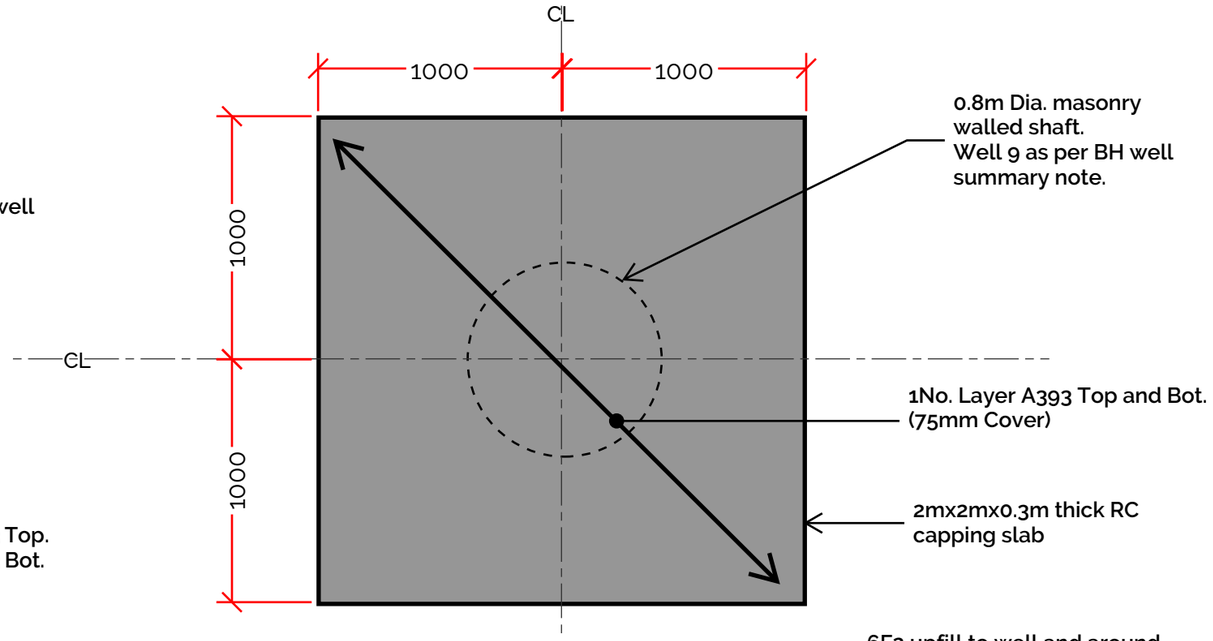

WELL 9 CAPPING SLAB PLAN
SSL=35.10m & FFL = 36.0m to 37.0m

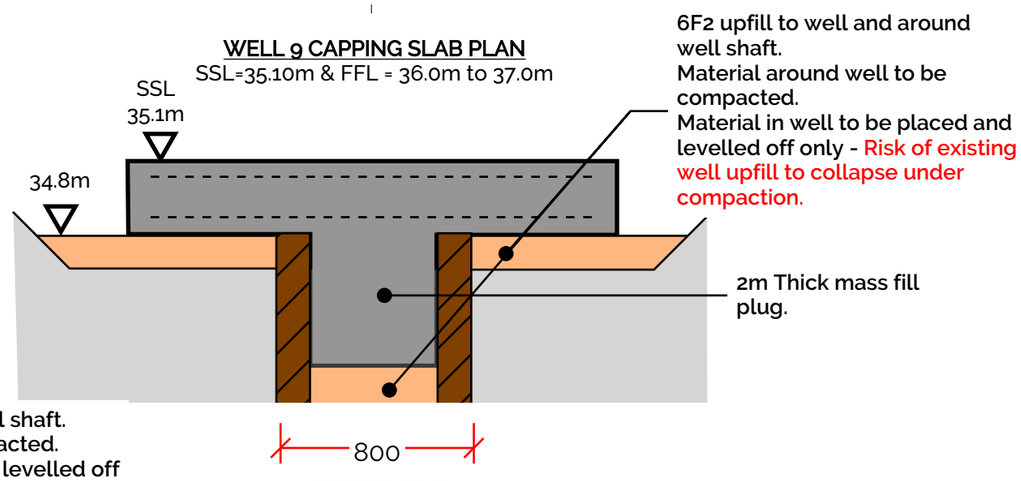

SECTION D-D

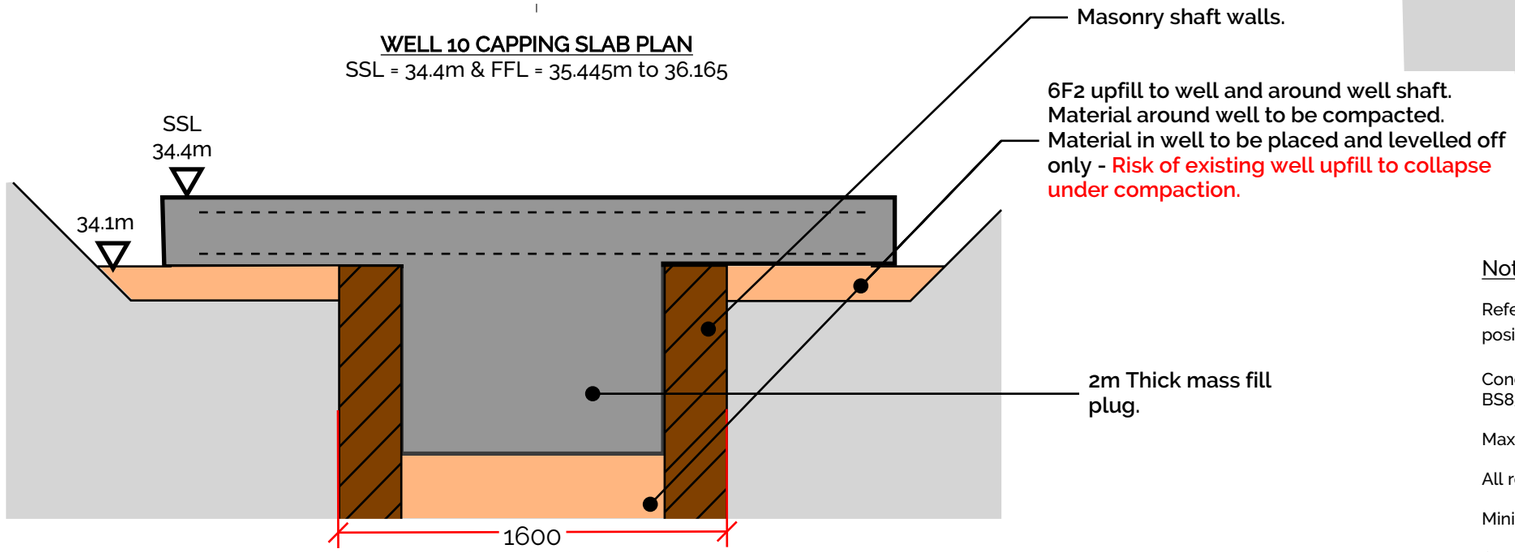

SECTION C-C

Notes

Refer to Buro Happold Mayfield Welll Summary report for position and condition of revealed relic wells.

Concrete to be designated mix FND2 in accordance with BS8500-1 and suitable for class 2 sulphate conditions.

Max aggregate 20mm

All reinforcement to be Grade 500B UNO

Minimum reinforcement lap length to be 40 x Dia.

Any unsutiable / soft ground to be removed and upfilled in compacted 6F2 material except from within the shafts.

Do not place concrete when there is risk of freezing or overheating.

Levels provided by PPoC drawing C0408-EW001.

Date	Rev	Description	Drawn	Chkd
13.05.21	C01	FOR CONSTRUCTION	NH	LH

Civic Engineers
MANCHESTER / LONDON / LEEDS / GLASGOW
www.civicengineers.com

Project: Mayfield Park, Enabling Works

Title: Well 9 and 10 Capping

Status: CONSTRUCTION

Project Number	Scale @ A3	Date Created	Drawn	Checked
1076-14	NTS	14.4.21	LH	RD

Drawing Number	Revision
1076-14-CIV-XX-EW-DR-S-301	C01

© CIVIC ENGINEERS LIMITED

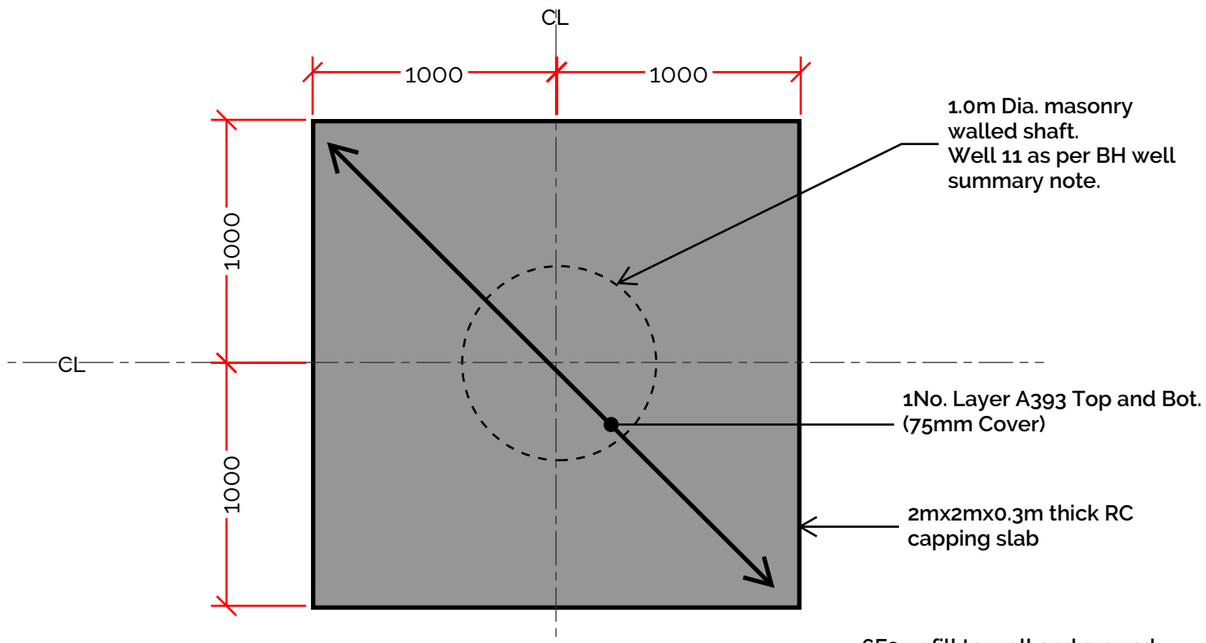

WELL 11 CAPPING SLAB PLAN

SSL=33.10m & FFL = 34.944m to 34.861m

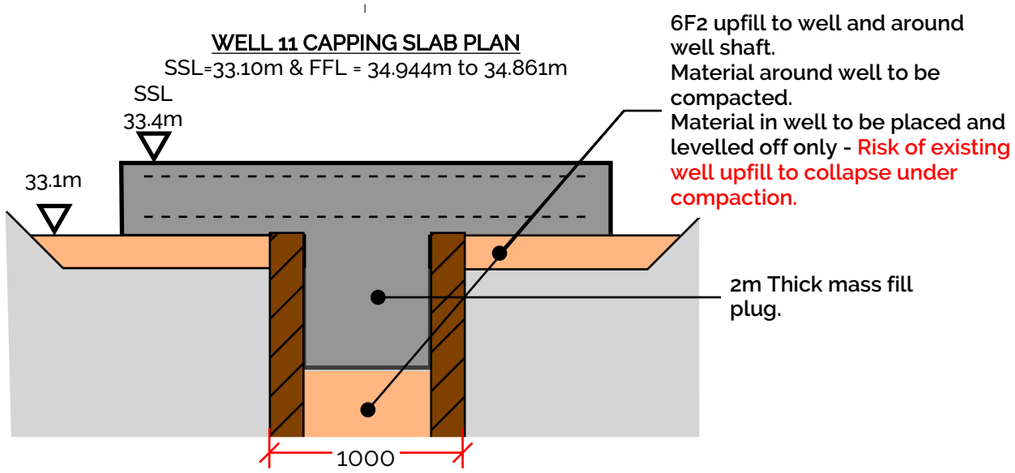

SECTION E-E

Notes

Refer to Buro Happold Mayfield Welll Summary report for position and condition of revealed relic wells.

Concrete to be designated mix FND2 in accordance with BS8500-1 and suitable for class 2 sulphate conditions.

Max aggregate 20mm

All reinforcement to be Grade 500B UNO

Minimum reinforcement lap length to be 40 x Dia.

Any unsutiable / soft ground to be removed and upfilled in compacted 6F2 material except from within the shafts.

Do not place concrete when there is risk of freezing or overheating.

Levels provided by PPoC drawing C0408-EW001.

Date	Rev	Description	Drawn	Chkd
13.05.21	C01	FOR CONSTRUCTION	NH	LH

Civic Engineers

MANCHESTER / LONDON / LEEDS / GLASGOW
www.civicengineers.com

Project: Mayfield Park, Enabling Works

Title: Well 11 Capping

Status: **CONSTRUCTION**

Project Number	Scale @ A3	Date Created	Drawn	Checked
1076-14	NTS	14.4.21	LH	RD

Drawing Number	Revision
1076-14-CIV-XX-EW-DR-S-302	C01

© CIVIC ENGINEERS LIMITED

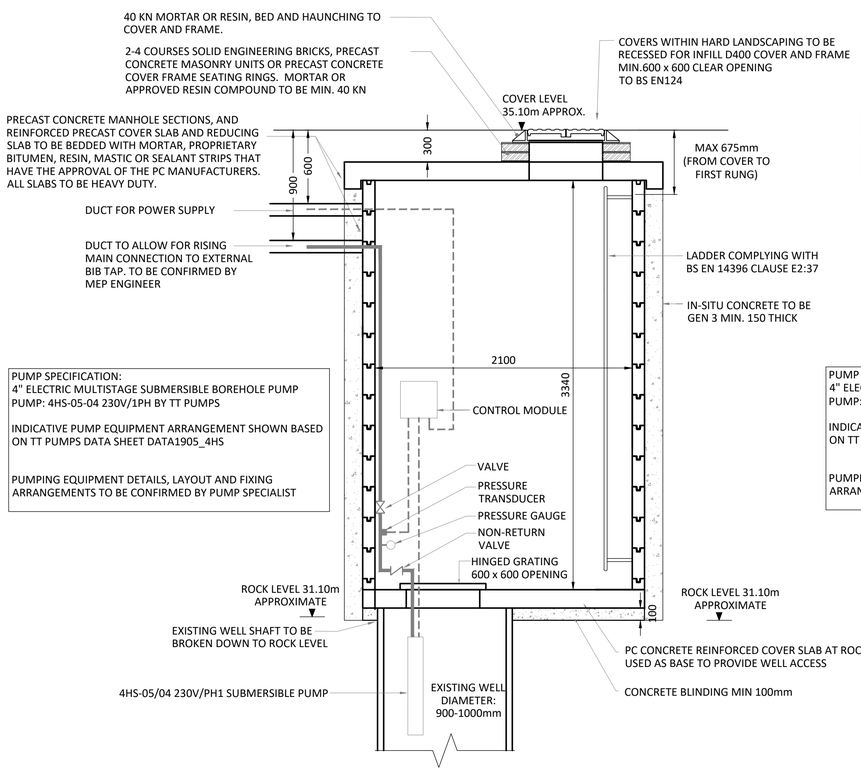

PUMP SPECIFICATION:
4" ELECTRIC MULTISTAGE SUBMERSIBLE BOREHOLE PUMP
PUMP: 4HS-05-04 230V/1PH BY TT PUMPS

INDICATIVE PUMP EQUIPMENT ARRANGEMENT SHOWN BASED ON TT PUMPS DATA SHEET DATA1905_4HS

PUMPING EQUIPMENT DETAILS, LAYOUT AND FIXING ARRANGEMENTS TO BE CONFIRMED BY PUMP SPECIALIST

SECTION A-A

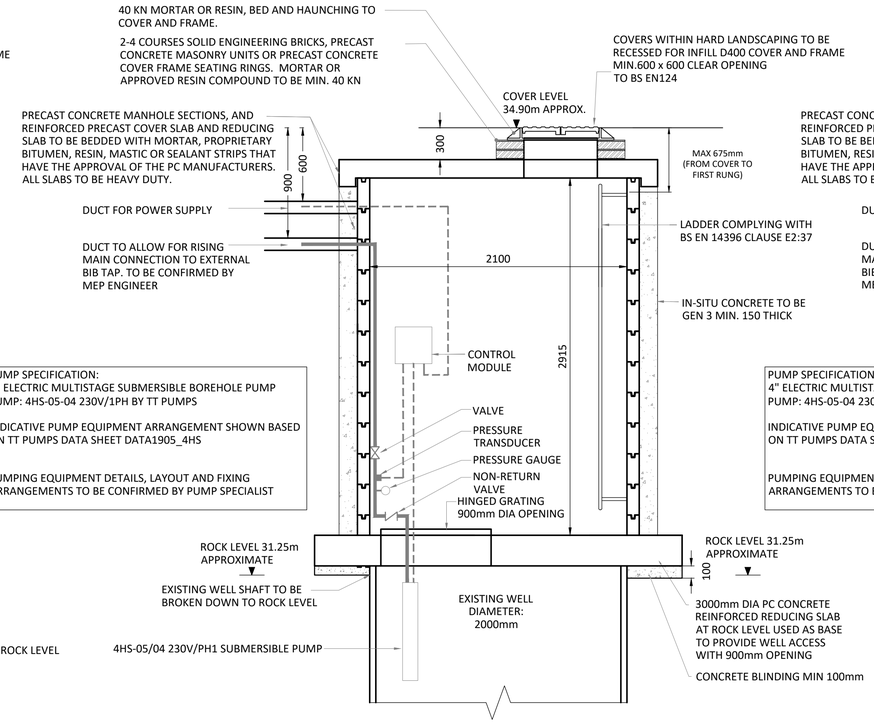

PUMP SPECIFICATION:
4" ELECTRIC MULTISTAGE SUBMERSIBLE BOREHOLE PUMP
PUMP: 4HS-05-04 230V/1PH BY TT PUMPS

INDICATIVE PUMP EQUIPMENT ARRANGEMENT SHOWN BASED ON TT PUMPS DATA SHEET DATA1905_4HS

PUMPING EQUIPMENT DETAILS, LAYOUT AND FIXING ARRANGEMENTS TO BE CONFIRMED BY PUMP SPECIALIST

SECTION A-A

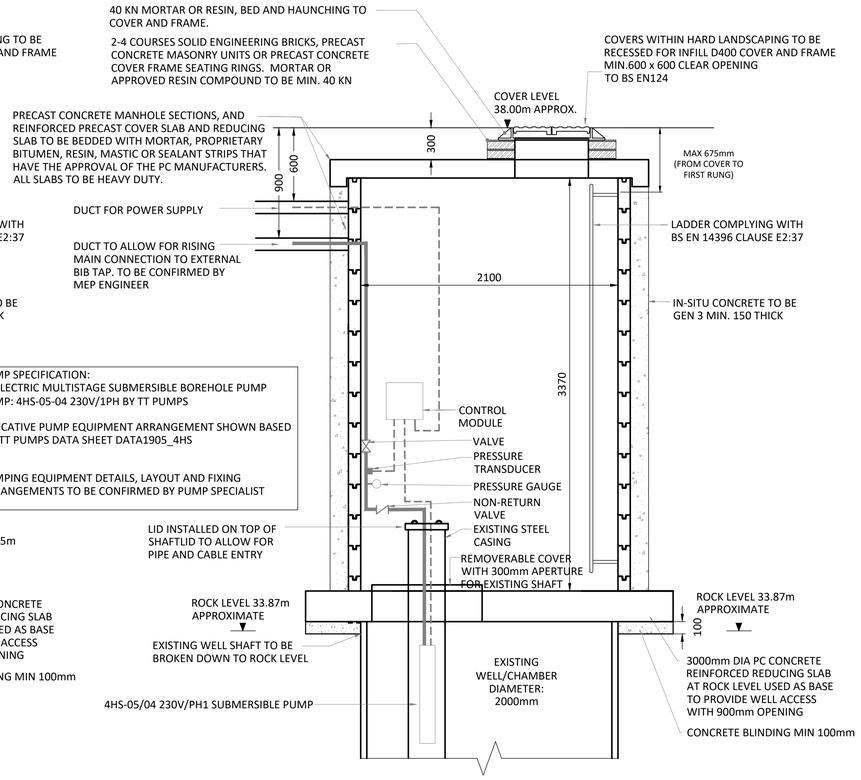

PUMP SPECIFICATION:
4" ELECTRIC MULTISTAGE SUBMERSIBLE BOREHOLE PUMP
PUMP: 4HS-05-04 230V/1PH BY TT PUMPS

INDICATIVE PUMP EQUIPMENT ARRANGEMENT SHOWN BASED ON TT PUMPS DATA SHEET DATA1905_4HS

PUMPING EQUIPMENT DETAILS, LAYOUT AND FIXING ARRANGEMENTS TO BE CONFIRMED BY PUMP SPECIALIST

SECTION A-A

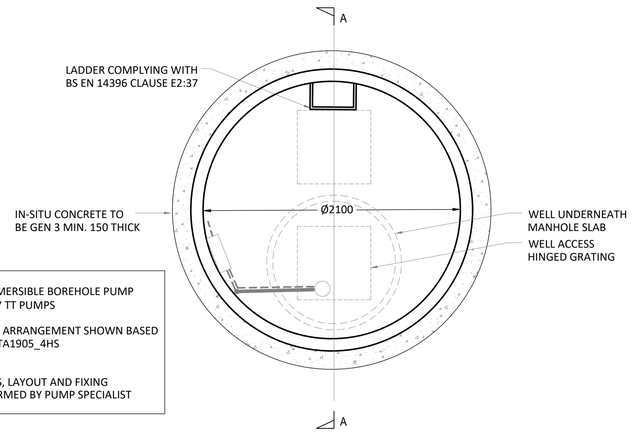

PUMP SPECIFICATION:
4" ELECTRIC MULTISTAGE SUBMERSIBLE BOREHOLE PUMP
PUMP: 4HS-05-04 230V/1PH BY TT PUMPS

INDICATIVE PUMP EQUIPMENT ARRANGEMENT SHOWN BASED ON TT PUMPS DATA SHEET DATA1905_4HS

PUMPING EQUIPMENT DETAILS, LAYOUT AND FIXING ARRANGEMENTS TO BE CONFIRMED BY PUMP SPECIALIST

PLAN

MANHOLE DETAIL FOR WELL 2

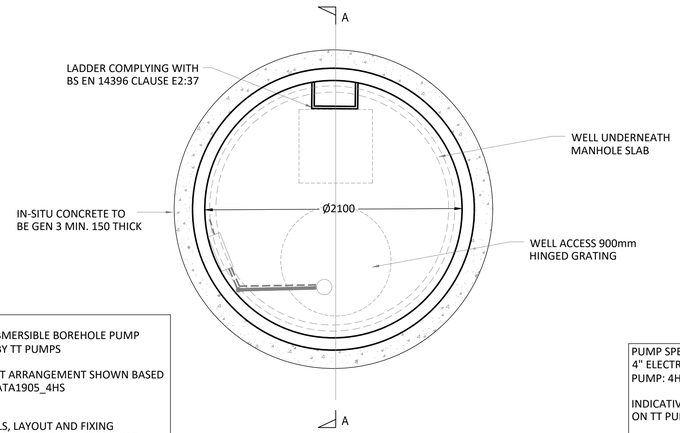

PUMP SPECIFICATION:
4" ELECTRIC MULTISTAGE SUBMERSIBLE BOREHOLE PUMP
PUMP: 4HS-05-04 230V/1PH BY TT PUMPS

INDICATIVE PUMP EQUIPMENT ARRANGEMENT SHOWN BASED ON TT PUMPS DATA SHEET DATA1905_4HS

PUMPING EQUIPMENT DETAILS, LAYOUT AND FIXING ARRANGEMENTS TO BE CONFIRMED BY PUMP SPECIALIST

PLAN

MANHOLE DETAIL FOR WELL 6

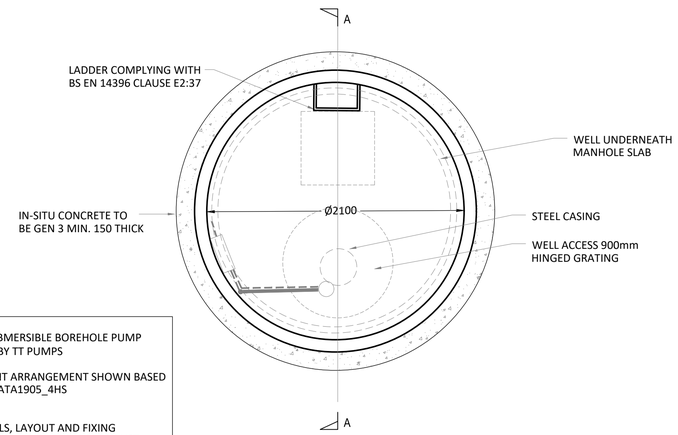

PUMP SPECIFICATION:
4" ELECTRIC MULTISTAGE SUBMERSIBLE BOREHOLE PUMP
PUMP: 4HS-05-04 230V/1PH BY TT PUMPS

INDICATIVE PUMP EQUIPMENT ARRANGEMENT SHOWN BASED ON TT PUMPS DATA SHEET DATA1905_4HS

PUMPING EQUIPMENT DETAILS, LAYOUT AND FIXING ARRANGEMENTS TO BE CONFIRMED BY PUMP SPECIALIST

PLAN

MANHOLE DETAIL FOR WELL 11

Standard Notes

1. This drawing is to be read in conjunction with all relevant Architect's and Engineer's drawings and the specification.
2. This drawing should not be scaled.
3. All dimensions are to be verified by the contractor on site.
4. All discrepancies should be reported to the C.A. prior to the commencement of the works.

© CIVIC ENGINEERS LIMITED

Notes and Keys

Date	Rev	Description	Drawn	Chk
09.08.21	A.1	ISSUED FOR CONSTRUCTION	CD	CK
30.07.21	A	ISSUED FOR CONSTRUCTION	CD	CK
29.07.21	S4.1	WELL 11 AMENDED, PUMP DETAILS ADDED	CD	CK
07.07.21	S4	ISSUED FOR APPROVAL	CD	CK
24.06.21	S3.1	WELL MANHOLE LEVELS AMENDED	CD	CK
04.06.21	S3	ISSUED FOR REVIEW	CD	CK

Project
MAYFIELD PARK

Title
WELL MANHOLE DETAILS

Project Number	Scale @ A1	Date Created	Drawn	Checked	Suitability
1076-13	1:25	27.05.21	CD	CK	----

Civic Engineers

MANCHESTER Carver's Warehouse, 77 Dale Street, Manchester, M1 2HG, Tel: 0161 228 6751
LONDON Reeds Wharf, 33 Mill Street, London SE1 2AX, Tel: 020 7253 2977
LEEDS Tower Works, Unit 02-01, Globe Road, Leeds, LS11 5QG, Tel: 0113 2025 130
GLASGOW Gresham Chambers, 45 West Nile St, Glasgow, G1 2PT, Tel: 0141 370 1829
www.civicengineers.com

Status
STAGE 5

Drawing Number	Revision
MAY101-WSC-EXT-CIV-DR-7020-0201	A.1