Contractors are not to scale dimensions from this drawing

Rev	Description	By	Date
P01	Planning Issue	MM	23/09/21

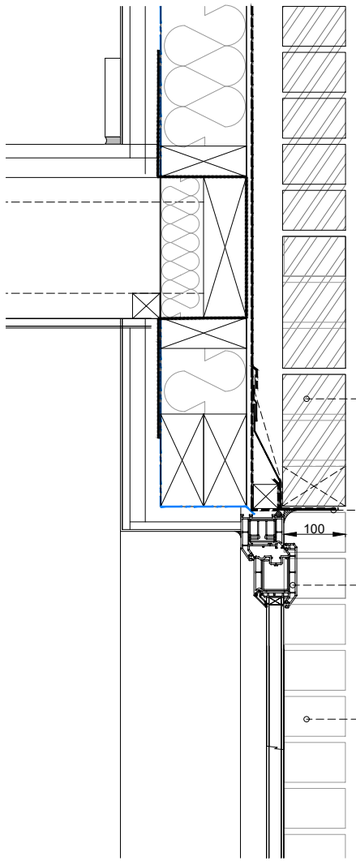

65mm facing brick external leaf
(Double Soldier course to GF front elevation)

GRP/uPVC Lintel capping,
colour to match windows

Double glazed uPVC windows,
Colour RAL 7015. Exact window spec
and frames tbc by Main Contractor.

Half brick (100mm) reveal to all
window and door openings

Typical Head Detail
(1:10)

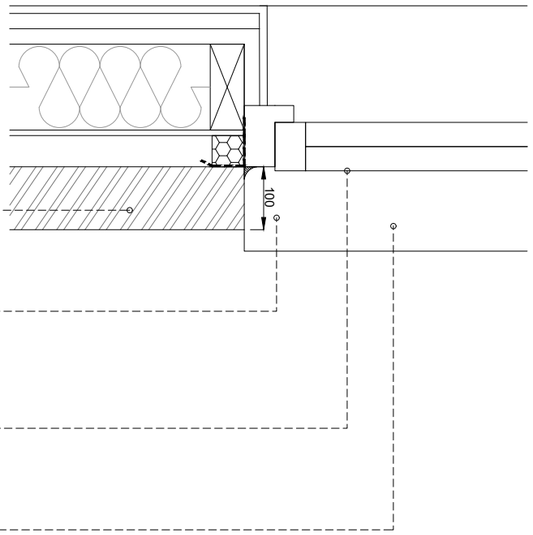

65mm facing brick external leaf

Half brick (100mm) reveal to all
window and door openings

Double glazed uPVC windows,
Colour RAL 7015. Exact window spec
and frames tbc by Main Contractor.

uPVC cill, Colour RAL 7015.

Typical Jamb Detail
(1:10)

Note: Design/Layouts/Areas are indicative only at this stage and subject to detailed design.

Modern City
Architecture & Urbanism

Eastgate, 2 Castle Street
Castlefield
Manchester
M3 4LZ

0161 974 7203
info@mcau.co.uk
www.mcau.co.uk

Client
Rowlinson

Project
Silk Street, Manchester

Description
GA Proposed House Types
Window/Door Reveal Details
Head and Jamb

Status
Construction

Scale	Drawn	Date
1:10 @ A3	MM	Sep 21
Job number	**Drawing number**	**Revision**
1184	21-HT-900	P01

Copyright MODERNCITY | Architecture + Urbanism